TowerPinkster
Architecture · Engineering · Interiors

ADDENDUM NO. 1

DATE OF ISSUANCE:	**May 5, 2025**
PROJECT:	**FHB Buckman St. Branch - 2025 Renovations** **130 S. Buckman Street** **Shepherdsville, KY 40165**
OWNER:	**First Harrison Bank**
ARCHITECT'S PROJECT NO.:	**24-220**
ORIGINAL BID ISSUE DATE:	**April 30, 2025**

SCOPE OF WORK

This Addendum includes changes to, or clarifications of, the original Bidding Documents and any previously issued addenda, and shall be included in the Bid. All of these Addendum items form a part of the Contract Documents. The Bidder shall acknowledge receipt of this Addendum in the appropriate space provided on the Bid Form. Failure to do so may result in disqualification of the Bid.

DOCUMENTS INCLUDED IN THIS ADDENDUM

This Addendum includes **1** page of text and the following documents:

- Mold Investigation Report
- Drawings: **I101, I301, P001, P101, P102, P103, M001, M101, M601, M801, M802, ES100, E101, E102, and E103**

GENERAL

A Limited Initial Mold Investigation Report performed by The IEP Group has been included for Bidder's information.

CHANGES TO DRAWINGS

ADD-1 Item No. D-1 - Interiors, Plumbing, Mechanical, and Electrical Drawings

The following drawings are added to the Contract Documents:

- **I101, I301, P001, P101, P102, P103, M001, M101, M601, M801, M802, ES100, E101, E102, and E103**

END OF ADDENDUM.

Limited Initial Mold Investigation Report

Presented To:

John Hardin
Facilities Director
First Harrison Bank

Project:

First Harrison Bank
Buckman Branch
130 S Buckman Street
Shepherdsville, KY 40165

The IEP Group Project No. T24132

Inspection Dates: June 14 & 24, 2024

Report Date: June 27, 2024

TABLE OF CONTENTS

1. CONTACT INFORMATION

Project Name & Address:	Limited Initial Mold Investigation First Harrison Bank – Buckman Branch 130 S Buckman Street Shepherdsville, KY 40165
Client:	John Hardin Facilities Director First Harrison Bank 5100 State Road 64 Georgetown, IN 47112 Phone: (812) 267-5433 Email: jhardin@firstharrison.com
The IEP Group Project Number:	T24132
Consultants:	Charles Van Allen, CIE Certified Indoor Environmentalist #1905014 KY AHERA Asbestos Inspector #80808 Expires November 9, 2024 The IEP Group, LLC 657 S Hurstbourne Parkway #307 Louisville, KY 40222 Phone: (502) 264-3028 Email: charlesva@theiepgroup.com Robert E. Crawley, CIEC Industrial Hygiene Consultant Certified Indoor Environmental Consultant #0810019 KY AHERA Management Planner #80809 Expires November 9, 2024 The IEP Group, LLC 838 East High Street #309 Lexington, KY 40502 Phone: (859) 940-3466 Email: robertc@theiepgroup.com
Inspection Dates:	June 14 & 24, 2024
Report Date:	June 27, 2024

2. GENERAL BACKGROUND

2.1 Executive Summary

John Hardin, Facilities Director with First Harrison Bank (referred to hereunder as the client), retained The IEP Group, LLC to perform a Limited Initial Mold Investigation related to concerns over mold and moisture at the Buckman Branch of First Harrison Bank located at 130 S Buckman Street in Shepherdsville, KY (referred to hereunder as the subject property).

Reportedly, suspect mold and moldy odors have been observed within the subject property. Occupants have complained of negative health symptoms believed to be mold related. The client is concerned about possible mold and moisture issues and requested that an Initial Mold investigation be performed at the subject property.

On June 14, 2024, The IEP Group, LLC performed a Limited Initial Mold Investigation, including a visual inspection and sampling of suspect locations and to determine an appropriate course of action. Mr. Robert E. Crawley, CIEC of The IEP Group, and Mr. Charles Van Allen, CIE with the IEP Group, met John Hardin on site. On June 24th, Mr. Van Allen met John Hardin on site to perform additional investigation. The following is a brief summary of findings:

MOLD SUMMARY

- Elevated airborne mold spore counts were reflected in the southwest office and in the drive-thru teller office.
    - Likely related to standing water and assumed related mold growth in the HVAC sub-slab return air ducts.
- Visible mold was observed in the north HVAC air handling unit (AHU), the southeast HVAC AHU, and the southeast/southwest AHU main supply trunkline.
    - A surface sample collected within the southeast AHU indicated mold growth.
- Surface samples collected from the HVAC main trunkline exterior insulation in the HVAC closet and from the HVAC closet plaster walls indicated mold growth.
    - Likely related to previous periods of elevated indoor relative humidity in the closet.
- Surface samples collected within supply flex ducts indicated mold growth.
- Moldy odors were observed upon entering the subject property.

In general, visible mold growth should be removed and moisture issues should be controlled. According to the Institute of Inspection, Cleaning and Restoration Certification (IICRC) S520-2008 Standard and Reference Guide for Professional Mold Remediation, porous contents and building materials with visible mold growth should be removed and replaced. Semi-porous and non-porous materials can typically be cleaned and restored. Section 7 of this report provides specific recommendations regarding this inspection. Section 5 provides the conclusions as to why these recommendations are deemed necessary. Sections 4 and 3 provide the observations and measurements that lead to the conclusions of this investigation. For details, please read the report in its entirety.

ASBESTOS SUMMARY:

On June 14, 2024, The IEP Group collected four (4) bulk samples of suspect materials from what appeared to be two (2) homogeneous areas.

The analytical results indicated that the following samples were **positive** for asbestos content (i.e., contain >1% asbestos):

- **White HVAC seam tape (40% Chrysotile).**

The analytical results indicated that the following samples were negative for asbestos content (i.e., do not contain >1% asbestos):

- HVAC duct exterior insulation

2.2 Purpose and Scope

The purpose of this investigation was to conduct a visual and analytical Limited Initial Mold Investigation of the reportedly affected areas and to advise the client regarding any prudent response actions. The scope of this limited assessment included destructive, semi-destructive, and non-destructive visual inspection of the reportedly affected areas, measurements (moisture testing of selected substrates using an infrared camera and/or a penetrating and non-penetrating moisture meter, temperature, relative humidity, and dew point), collection of air and surface samples for mold identification, collection of bulk samples for asbestos analysis, digital photos of key observations, and production of a written report of findings and recommendations.

The assessment was executed in accordance with the authorized scope of work from the client; however, this report does not indicate the termination of work at the subject site. This report is solely a record of activities, observations, analytical results, and recommendations performed to date.

2.3 Site Description

The subject property is a one-story bank branch constructed slab-on-grade. Interior building materials include lay-in ceiling tiles, plaster & button board walls and ceilings, drywall & joint compound walls, and faux wood vinyl, carpet tile, and bare concrete floors. The roof is pitched with asphalt shingles, and the building is serviced by three HVAC split-systems.

The date of construction and square footage of the property were not known at the time of the investigation.

The subject property is in a commercial neighborhood and surrounded by other commercial properties. The topography of the immediately surrounding landscape is generally flat.

3. METHODOLOGY & RESULTS

3.1 Surface Moisture Measurements

In order to avoid fungal growth, building materials should be dry. Building materials are measured to determine the moisture content. According to the IICRC S500 12.4.1.5 (2006), wood structural members should be below 16% moisture content prior to reconstruction. Building materials should be less than 16% moisture content and/or drier than the dry standard for the subject property. A dry standard is derived by measuring the moisture content of particular materials in a non-affected location and comparing that to the same materials in the affected area.

Various infrared technology such as a Flir E6 ™ thermal imaging camera, a Flir Thermacam ™ B2 infrared camera or a CAT® S60 with a Flir thermal camera utilizing app version 1.012, serial number 972334 is used to visually determine the likelihood of high moisture content throughout visually accessible (unobstructed) building materials. Wet building materials can often be identified using infrared imaging, or thermography. Thermography is the use of an infrared imaging camera to "see" thermal energy emitted and/or reflected from an object. Infrared thermography cameras produce images of invisible infrared or "heat" radiation. Since wet building materials tend to be cooler or warmer than surrounding dry building materials, wet building materials can often be distinguished in an infrared image. Thermography is useful in determining moisture content of building materials which are not conducive to visual assessment or moisture meter survey, such as drapery, elevated ceilings, high walls, etc.

Building materials were measured with a Protometer Surveymaster™ dual function moisture meter. The search mode is used to assess the moisture level beneath the surface of solid walls and floors independently of surface conditions. The nominal depth of the measurement is ¾ inch. Search mode (REL) has a relative range of 90-999. Measure mode has a range of 7%-99%. Under measurement mode, the % is the actual percentage of moisture in wood or a wood moisture equivalent (WME) taken in non-wood samples.

The IEP Group, LLC performed thermography and/or moisture meter evaluation during the June 14 & 24, 2024, site visits. Key measurements are recorded in the observations section of this report.

3.2 Temperature, Relative Humidity & Dew Point

Temperature, relative humidity & dew point were measured using a pSense Portable CO_2 Meter, Model 7755. The unit's internal sensor and precision capacitance sensors contain a display that updates continuously in real time with temperature readings between 14-140^0 F and relative humidity between 0.1% - 99.9% RH. The temperature sensor has an accuracy of +/- 0.9^0 F and is typically rounded to the nearest whole number. The relative humidity (RH) sensor has an accuracy of ~ +/- 3% of the reading and is typically rounded to the nearest whole number. Dew point is calculated internally from the temperature and relative humidity readings. The American Society of Heating, Refrigerating and Air-Conditioning Engineers (ASHRAE) specifies the combinations of indoor space environment and personal factors that will produce thermal comfort conditions acceptable to 80% or more of the occupants within the space (ASHRAE Standard 55, *Thermal Environmental Conditions for Human Occupancy*). Temperatures in the winter should range from 68-74°F and 73-79°F in the summer (Addendum 55*a*, ASHRAE Standard 55, *Thermal Environmental Conditions for Human Occupancy*). ASHRAE provides guidance suggesting habitable spaces maintain a relative humidity between 30% and 60% for comfort. The ASHRAE standard 62.1-2010 recommends maintaining humidity <65% to prevent mold growth.

June 14th readings:

Location:	Temperature ^{0}F	Relative Humidity %RH	Dew Point ^{0}F
Outdoor Air	80	59	65
INDOORS			
Southwest Office	77	44	54
Lobby	76	47	55
Kitchen	74	45	51
Drive Thru Teller Office	71	48	51
North Restroom	72	53	54
South Restroom	71	52	53
Northeast Vault	72	51	53

DISCUSSION:

All indoor relative humidity readings were less than the outdoor reading and satisfied the ASHRAE standards of 30-60% for thermal comfort and of < 65% for the prevention of mold growth (Proper). Therefore, no deficiencies were noted.

It should be noted that humidity issues are typically a concern of the summer months. Measurements are point in time only and will change over time.

3.3 Airborne Mold Samples

An ALLEGRO Industries D-2 Mold-Lite Sampler P/N 9800-88 Series oscillating double diaphragm pump or an Allegro Rotary Vane P/N 9801-88 Series sampling pump is used for collecting airborne mold samples. The pump flow rate is set to the desired rate, typically 15 lpm for Zefon Air-O-Cell cassettes. Calibration of the pump is verified prior to and after sampling with a Dryer rotameter, 3-30 liters, that has been calibrated to a primary standard. This methodology provides rapid analysis of airborne contaminants in indoor air quality testing, allergy testing, and flood restoration monitoring. Molds are identified by direct microscopy, a method that counts both viable and nonviable mold particles to derive the total mold count.

On June 14, 2024, four (4) air samples were collected and submitted to AIHA accredited EMSL Analytical of Kernersville, NC (EMLAP 102564) for 48-hour turnaround time analysis. Each sample was collected for a total of six minutes. Sample 02 was collected in the southwest office. Sample 03 was collected in the lobby. Sample 04 was collected in the drive-thru teller office. Sample 01 was collected outdoors as a background for comparative analysis.

Results indicated the following:

Sample No.	Sample Location	Total Mold Count / m^3	Key Genera Present (Count/ m^3)	Sample Result
01	Outdoor Air	23,340	740 Ascospores 200 *Aspergillus/Penicillium* 19200 Basidiospores 2400 *Cladosporium*	Background
02	Southwest Office	1,210	70 Ascospores **300** ***Aspergillus/Penicillium*** 740 Basidiospores 100 *Cladosporium*	**Very Slightly Elevated**
03	Lobby	1,880	200 Ascospores 40 *Aspergillus/Penicillium* 1500 Basidiospores 100 *Cladosporium*	Balanced
04	Drive Thru Teller Office	6,400	200 Ascospores **4500** ***Aspergillus/Penicillium*** 1400 Basidiospores 300 *Cladosporium*	**Elevated**

DISCUSSION:

The total mold spore count in each air sample was less than that in the outdoor air sample (Proper). Very slightly elevated counts of Aspergillus/Penicillium mold spores were reflected in southwest office air sample 02 (Improper). Therefore, sample 02 was considered slightly elevated when indoor and outdoor results were compared. The hierarchy of mold spore types in the lobby air sample 03 was similar to that in the outdoor air sample (Proper). Therefore, air sample 03 was considered balanced when indoor and outdoor results were compared. Elevated counts of Aspergillus/Penicillium mold spores were reflected in drive-thru teller office air sample 04 (Improper). Therefore, air sample 04 was considered elevated when indoor and outdoor results were compared.

These samples are merely a snapshot in time and reflect the airborne concentrations at the time of The IEP Group's investigation. Refer to the attached results for complete details.

3.4 Surface Mold Samples

Surface samples for mold can be collected by several methods including bulk material collection, tape lift, or swab. Samples are transferred to a microscope slide and analyzed under direct light microscopy. This methodology provides rapid analysis in indoor air quality testing, allergy testing, and flood restoration monitoring. Molds are identified by direct light microscopy, a method that counts both viable and nonviable mold particles.

On June 14, 2024, five (5) tape lift samples were collected from surfaces suspected of mold growth and submitted to AIHA accredited EMSL Analytical of Kernersville, NC (EMLAP 102564) for 48-hour turnaround time analysis. Sample T01 was a composite tape lift sample collected from multiple locations of the HVAC closet plaster walls. Sample T02 was a composite tape lift sample collected from the exterior insulation of HVAC trunk lines in the HVAC closet. Sample T03 was collected from locations of the HVAC southeast AHU interior insulation. Sample T04 was collected from the interiors of two HVAC supply flex ducts along the south side of the building. Sample T05 was collected from the interior of a drive-thru teller office HVAC supply flex duct.

Results indicated the following:

Sample	Sample Location	Concentration	Key Genera Present	Conclusion
T01	HVAC Closet Walls	Low*	Cladosporium	Mold Growth Present IICRC Condition III
T02	HVAC Closet Trunk Line Exterior Insulation	Low*	Cladosporium	Mold Growth Present IICRC Condition III
T03	HVAC Southeast AHU Interior Insulation	High High*	Aspergillus/Penicillium Cladosporium	Mold Growth Present IICRC Condition III
T04	HVAC South Supply Flex Ducts	High*	Cladosporium	Mold Growth Present IICRC Condition III
T05	HVAC Drive-thru Teller Office Flex Duct	Medium*	Cladosporium	Mold Growth Present IICRC Condition III

* Hyphae and/or fruiting structures consistent with mold growth were reflected in the sample.

DISCUSSION:

T01

- Sample T01 was a composite tape lift sample collected from multiple locations of the HVAC closet plaster walls.
- Low concentrations of Cladosporium mold spores were reflected in the sample.
  - Low concentrations indicate 11-100 spores per area analyzed and are typically consistent with an IICRC Condition I (normal) environment. However, in the present case, hyphae and/or fruiting structures consistent with mold growth were also present in the sample. Therefore, the sample is deemed to reflect an IICRC Condition III environment (mold growth present).

T02

- Sample T02 was a composite tape lift sample collected from the exterior insulation of HVAC trunk lines in the HVAC closet.
- Low concentrations of Cladosporium mold spores were reflected in the sample.
  - Low concentrations indicate 11-100 spores per area analyzed and are typically consistent with an IICRC Condition I (normal) environment. However, in the present case, hyphae and/or fruiting structures consistent with mold growth were also present in the sample. Therefore, the sample is deemed to reflect an IICRC Condition III environment (mold growth present).

T03

- Sample T03 was collected from locations of the HVAC southeast AHU interior insulation.
- High concentrations of Aspergillus/Penicillium and Cladosporium mold spores were reflected in the sample.
  - High concentrations indicate >1000 spores per area analyzed and are consistent with an IICRC Condition III environment (mold growth present).
  - Additionally, hyphae and/or fruiting structures consistent with mold growth were also present in the sample.

T04

- Sample T04 was collected from the interiors of two HVAC supply flex ducts along the south side of the building.
- High concentrations of Cladosporium mold spores were reflected in the sample.
  - High concentrations indicate >1000 spores per area analyzed and are consistent with an IICRC Condition III environment (mold growth present).
  - Additionally, hyphae and/or fruiting structures consistent with mold growth were also present in the sample.

T05

- Sample T05 was collected from the interior of a drive-thru teller office HVAC supply flex duct.
- Medium concentrations of Cladosporium mold spores were reflected in the sample.
  - Medium concentrations indicate 101-1000 spores per area analyzed and are consistent with either an IICRC Condition II environment (settled spores) of and IICRC Condition IIII environment (mold growth present).
    - In the present case, hyphae and/or fruiting structures consistent with mold growth were also present in the sample. Therefore, the sample is deemed to reflect an IICRC Condition III environment (mold growth present).

See the attached sample results for complete details.

3.5 Asbestos Bulk Sampling

Asbestos bulk samples were collected and placed in zip-lock bags for laboratory analysis. This sampling was performed to identify asbestos in specific suspect asbestos-containing materials (ACM). The samples were submitted for analyses via polarized light microscopy (PLM).

The PLM method is the most commonly used method to analyze building materials for the presence of asbestos. The PLM method is in accordance with the EPA Interim Method of the Determination of Asbestos in Bulk Samples (EPA, July 1993). This method utilizes the optical properties of minerals to identify the selected constituent. The use of this method enables identification of the type and the percentage of asbestos in a sample.

The detection limit of the PLM method for asbestos identification is approximately one percent (1%) asbestos. The IEP Group, LLC recommends Transmission Electron Microscopy (TEM) or Point Counting analysis for asbestos samples with trace, or less than one percent (<l%) when analyzed via PLM.

In some cases, samples collected from an apparently homogeneous material and yielding mixed results may, in fact, have been taken from different homogeneous materials displaying similar visual characteristics but composed of different constituents. Although materials may appear to be homogeneous, different manufacturers may have produced them in different batches. Materials appearing to be homogeneous but yielding mixed results are typically assumed, in accordance with AHERA procedures, to be asbestos containing in all areas where the materials are located.

Four (4) asbestos bulk samples, collected by The IEP Group on June 14, 2024, were submitted under chains of custody for 48-hour turn-around PLM analysis to EMSL of Kernersville, NC. EMSL is accredited by the NVLAP (#102104-0) for bulk asbestos analysis (PLM).

On June 14th, the following samples were collected and analyzed and were found to be negative for asbestos (<1% ACM):

Material	Location(s)	% Asbestos
HVAC trunk line exterior insulation	HVAC closet and ceiling cavities	None Detected

DISCUSSION:

- No asbestos was detected in the materials recorded in the table above.

POSITIVE RESULTS

Samples containing asbestos fibers are considered positive. Materials containing asbestos fibers are regulated. Materials containing asbestos fibers scheduled for disturbance or in poor condition are subject to handling and disposal according to all applicable local, state, and federal regulations.

On June 14, 2024, the following materials were tested and found to be asbestos-containing materials (>1% ACM):

Material	**% Asbestos / Type**	**Condition**	**Friable**	**Quantity / Known Location**	**AHERA Material Description**	**NESHAP Category**	**OSHA Class**
White HVAC seam tape	40% Chrysotile	Poor	Yes	TBD/observed in HVAC closet on exposed locations of main trunk lines – possibly present under main trunk exterior insulation	Miscellaneous	RACM	Class II

DISCUSSION:

- The white HVAC seam tape contains 40% chrysotile.
- NESHAP considers the white HVAC seam tape to be RACM.
- OSHA considers disturbance of the white HVAC seam tape to be Class II work.

4. OBSERVATIONS

4.1 Site & Sample Locations Diagram

*Not Drawn to Scale

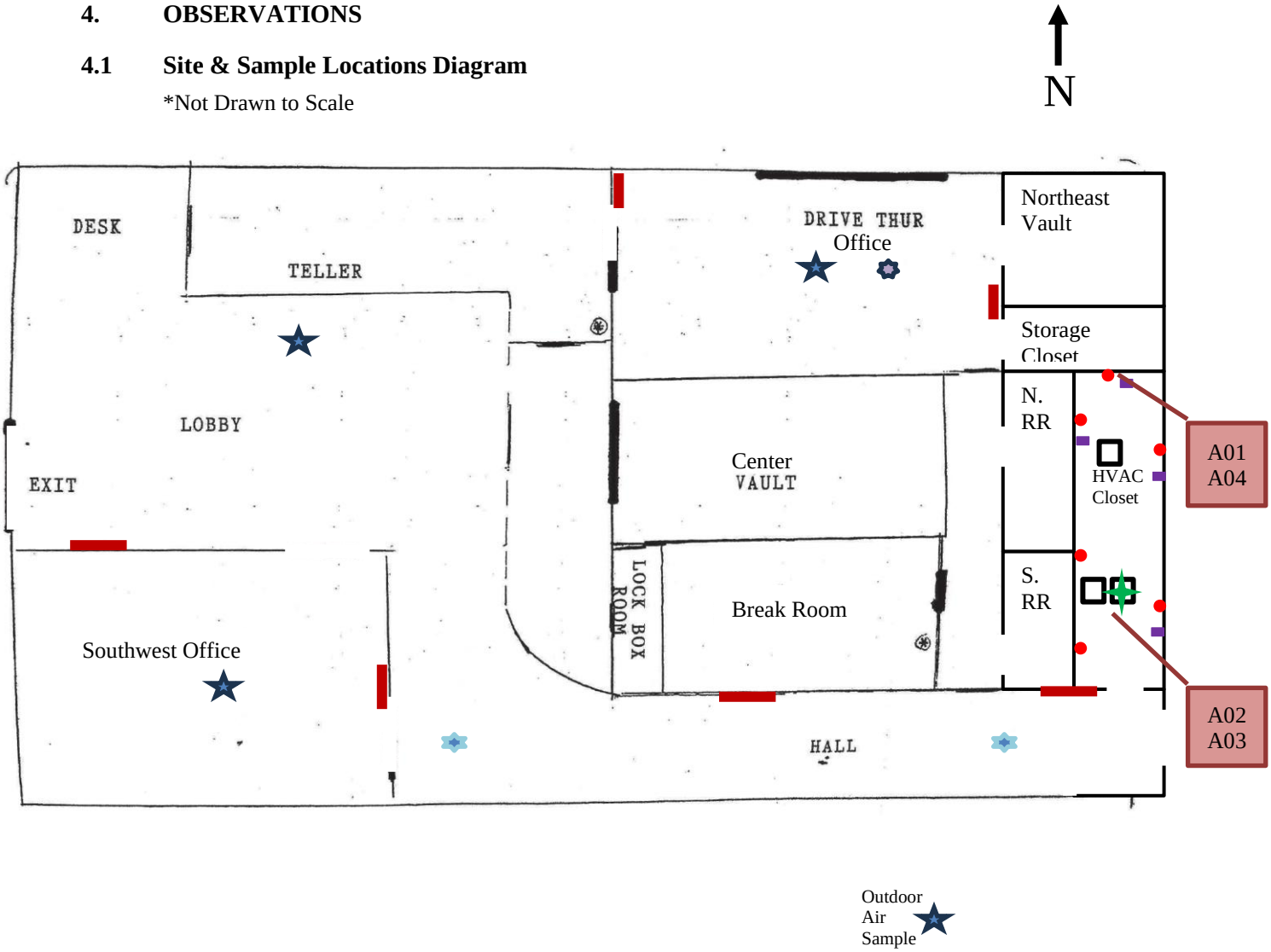

KEY

- Airborne mold sample location
- Sample T01 location
- Sample T02 location
- Sample T03 location
- Sample T04 location
- Sample T05 location
- HVAC air handling unit (AHU)
- HVAC return duct grille
- -- Asbestos bulk sample location

4.2 Furnished Information

1. Moldy odors were observed within the subject property.
2. Suspect mold was observed on surfaces in the HVAC closet.
3. Occupants of the drive-thru teller office have complained of negative health symptoms.
4. Reportedly, a plumbing pipe leak in the wall common to the north and south restrooms had occurred.
    a. The leaking pipe had been accessed and repaired.

4.3 Visual Observations

4.3.1 June 14, 2024 Visual Observations

On the day of the site visit, the affected areas of the subject property were visually inspected for deficiencies that could potentially affect the indoor air quality (IAQ), including any signs of water damage, fungal-enzyme staining, and visible fungal growth. The IEP Group's observations include:

GENERAL

1. The subject property was occupied at the time of the investigation.
2. Moldy odors were observed upon entering the back hall.

INDOORS

<u>Northeast Vault</u>

3. No deficiencies regarding mold growth were noted.
4. White 9"x 9" vinyl floor tile (VFT) was observed.
    a. The VFT is suspected of containing asbestos.
        i. No asbestos bulk samples of the VFT were collected.

<u>Storage Closet</u>

5. No deficiencies regarding mold growth were noted.

<u>South Restroom</u>

6. An ~ 1'x 3' hole was present in the north wall plaster & button board wall above the toilet.
    a. Reportedly, this was the location of the plumbing leak that had been repaired.
    b. Tested locations of the plaster wall around and below the hole measured dry (~ 76-202 REL).
    c. Locations of exposed button board in the wall cavity appeared generally clean.
7. No deficiencies regarding mold growth were noted.

<u>North Restroom</u>

8. The south wall is common to the south restroom.
    a. A location of the wall above the toilet (corresponding to the location of the reported south restroom plumbing leak) was damaged.
        i. Tested locations of the damaged plaster & button board wall measured dry.
    b. Tested locations of the wall below the sink measured dry (~ 116 REL).
9. No deficiencies regarding mold growth were noted.

Break Room

10. The sink cabinet base shelf was stained/damaged.
    a. Tested locations of the affected base shelf measured dry (~ 114 REL).
11. No deficiencies regarding mold growth were observed in the water heater closet.

Center Vault

12. No deficiencies regarding mold growth were noted.

Drive-thru Teller Office

13. A HEPA air filter was present in the room.

Lobby

14. Light mold growth was observed behind the wallpaper on the lower window jambs.
    a. The jambs are plaster on brick or block.
    b. The jambs measured dry (< 200 REL).

Ceiling Cavity

15. A brief survey of the ceiling cavity was made from the vantage point of the building rear entry and from the drive-thru office.
    a. An attic space appeared to be present above the corrugated metal ceiling deck.
        i. The attic could be seen through an ~ 2'x 2' hole in the ceiling deck in the back hall.
        ii. The attic was not entered.
16. No apparent deficiencies regarding mold growth were noted from the locations accessed.

HVAC Closet

17. The walls and ceiling are plaster.
    a. Light mold was observed on the plaster walls.
        i. A tape lift sample collected from multiple locations of the plaster walls indicated mold growth.
18. HVAC main trunk lines observed in the closet appeared to be metal with exterior insulation.
    a. No asbestos was detected in bulk samples collected from the insulation.
    b. A tape lift sample collected from multiple locations of the insulation indicated mold growth is present on the exterior.
19. White HVAC seam tape was observed on select exposed locations of trunklines in the closet.
    a. The seam tape contains 40% Chrysotile asbestos.
20. The floor is bare concrete.
21. A floor drain is present in the closet.
    a. Water appeared to be present in the drain.
22. Fiberglass pipe wrap was observed on pipes behind the southwest air handling unit (AHU).

HVAC

North AHU

23. A label on the front of the cooling section of the AHU indicated the unit was manufactured in 2023.
24. The heater section of the AHU appeared older than the chill coil box.
25. Minor visible mold was observed on the chill coils.
26. The air filter was improperly fit and no cover was present on the air filter slot.
27. The air filter was dirty.

Southeast AHU

28. The unit appeared to be old.
29. Heavy accumulations of mold were observed on the AHU interior insulation.
    a. A surface sample collected from the insulation indicated mold growth.
30. Visible mold was observed on the main supply trunk boot above the AHU.

Southwest AHU

31. A label on the front of the unit was manufactured in 2020.
32. Minor suspect mold was observed on the chill coils.
33. The unit appeared to service the same main supply trunk line as the southeast AHU.
    a. Visible mold was observed on the main supply trunk boot above the AHU.

General

34. Visible mold was observed on the supply vent diffuser outside the south restroom.
    a. The louvres associated with this diffuser were closed.
35. The supply flex duct servicing the supply vent at the building rear entrance was detached from the diffuser.
    a. A First Harrison Bank facilities person reattached the duct.
36. A gap is present between the break room supply vent boot and the lay-in ceiling tiles.
    a. This configuration would tend to blow conditioned air against the topside of the lay-in ceiling tiles.
        i. The topside of the lay-in ceiling tiles at this location appeared generally clean.
37. A surface sample collected from the supply flex duct servicing the building rear entry supply vent and the supply flex duct servicing the lobby southwest supply vent indicated mold growth.
38. A surface sample collected from a flex duct servicing the drive-thru office indicated mold growth.

EXTERIOR

39. A brief survey of the exterior was made.
    a. No apparent deficiencies were noted.

The IEP Group recorded key visual observations in the site diagrams and digital photographs attached to this document.

4.3.2 June 24, 2024 Visual Observations

On the day of the site visit, additional locations were visually inspected for deficiencies that could potentially affect the indoor air quality. Observations unique to the June 24th site visit include the following:

1. The drive-thru teller office was the focus of the return visit due to elevated airborne mold spore counts reflected in the air sample collected in the room on June 14th.
2. Stained sheathing panels were observed at the drive-thru lanes exterior overhang.
   a. The overhang for the exterior drive-thru lanes does not open to the interior of the building as viewed in the drive-thru teller office ceiling cavity.
3. Observations concerning the drive-thru teller office included the following.
   a. Tested locations of the north wall around and below the drive-thru teller window measured dry (~ 114 REL / ~ 12%).
   b. The north wall is comprised of a drywall wall installed over a plaster wall.
      i. A hole is present in the drywall wall behind the teller counter.
   c. Accumulations of dust and construction debris were observed behind the teller counter.
   d. The IEP Group removed sections of cove base from the north wall.
      i. The exposed lower drywall wall appeared generally clean.
   e. The IEP Group made an exploratory view hole in the lower north wall at the northwest corner.
      i. The backside of the removed drywall piece appeared generally clean.
      ii. The exposed wall cavity appeared generally clean where viewable.
4. Observations concerning the west wall below the HVAC return air inlet included the following:
   a. The IEP Group detached a section of the cove base at this location.
      i. Minor suspect mold was observed on the exposed lower plaster wall below the return air inlet grille.
   b. Tested locations of the wall measured dry (<16%).
   c. Tested locations of the opposing side of the wall (in the main teller area) measured dry (~ 12%).
5. Observations concerning return air inlets and ducts included the following:
   a. The return air ducts were accessed in the drive-thru teller office, in the lobby, and at the building rear entry.
      i. Approximately 4-8” of standing water was observed in each of the sub-slab return air ducts viewed.
   b. Heavy accumulations of dust were observed on return air grilles and louvres.
   c. Inlets were observed in the drive-thru teller office (2), in the lobby, in the southwest office, in the back hall, and at the building rear entry.
      i. Other locations may be present at other locations.

The IEP Group recorded key visual observations in the site diagrams and digital photographs attached to this document.

5. CONCLUSIONS

Mold & Moisture

1. No deficiencies in indoor relative humidity readings were noted.
2. No wet indoor building materials were identified.
3. Indoor airborne mold samples indicated the following:
   a. The southwest office air sample was very slightly elevated.
   b. The lobby air sample was balanced.
   c. The drive-thru teller office air sample was elevated.
4. No deficiencies were noted at the reported south bathroom plumbing leak location.
5. The break room sink cabinet base shelf was stained/damaged.
   a. Likely due to a previous plumbing leak.
6. Light mold growth is present on the plaster window jambs at the base of the window behind the wallpaper.
   a. Likely due to windows sweating during the colder winter months.
7. Conclusions concerning the HVAC closet include the following:
   a. Visible mold was observed on locations of the plaster walls.
      i. A surface sample collected from the plaster walls indicated mold growth.
      ii. Likely related to previous periods of elevated indoor relative humidity.
   b. A surface sample collected from various locations of the HVAC main trunkline exterior insulation indicated mold growth.
      i. Likely related to previous periods of elevated indoor relative humidity.
8. Conclusions concerning the HVAC systems include the following:
   a. Standing water was observed in each viewed sub-slab return air duct.
      i. Likely related to ground water entering the ducts.
      ii. This condition is the likely source of observed moldy odors and elevated airborne mold spore counts.
   b. Visible mold was observed within the north AHU.
   c. Visible mold was observed within the southeast AHU.
      i. A surface sample collected within the AHU indicated mold growth.
   d. A surface sample collected within flex ducts serviced by the southeast and southwest AHUs indicated mold growth.
   e. A surface sample collected within a drive-thru teller office supply flex duct indicated mold growth.
   f. A gap was observed between the break room supply vent boot and the lay-in ceiling tile below it.
      i. This condition may result in dewpoint moisture as cold air blows on the tile.
9. Suspect mold was observed on the sill plate below the drive-thru teller office west wall below the return air inlet.
   a. Possibly related to moisture migrating upwards from the standing water in the return air duct below.
10. Stains were observed on the drive-thru lanes exterior overhang sheathing panels.
    a. Possibly related to overhang roof leaks and/or exposure to the elements.

Asbestos

11. No asbestos was detected in the HVAC main trunk line exterior insulation.
12. **The white HVAC seam tape contains 40% Chrysotile asbestos.**
13. This is not a complete survey of suspect materials but only a limited screening of materials likely to be disturbed and most likely to contain asbestos. Other suspect materials may be present within the subject property.

6. GENERAL INFORMATION

6.1 General Mold Information

In keeping with the IICRC, the EPA and industry standard, the California Department of Public Health issued a statement on Building Dampness, Mold, and Health updated February 2016. Therein they conclude that the presence of water damage, visible mold, or mold odor in schools, workplaces, residences, and other indoor environments is unhealthy. They recommend against measuring indoor microorganisms or using the presence of specific microorganisms to determine the level of health hazard or the need for urgent remediation. Rather, they strongly recommend addressing water damage, dampness, visible mold, and mold odor by a) identification and correction of the source of water that may allow microbial growth or contribute to other problems, b) the rapid drying or removal of damp materials, and c) cleaning or removal of mold and moldy materials as rapidly and safely as possible to protect the health and well-being of building occupants.

The IICRC defines three conditions in respects to assessment of indoor mold. In summary, Condition 1 is a normal indoor environment that may have settled spores and fragments typical of similar environments. Condition 2 typifies areas with an increase in settled mold spores or perhaps trace mold growth, whereas Condition 3 is typified by areas of mold growth.

Key industry guidelines include but are not limited to the following:

a. The IICRC *"S520 Standard and Reference Guide for Professional Mold Remediation*" and the "S500 *Standard and Reference Guide for Professional Water Damage Restoration".*
b. The EPA document "*Mold Remediation in Schools and Commercial Buildings*" EPA 402-K-01-001 reprinted 9/2008;
Mold Remediation in Schools and Commercial Buildings EPA 402-K-01-001, September 2008.
c. 40 KAR 2:330 Mold Remediation; Title 040 Chapter 2 Regulation 330 • Kentucky Administrative Regulations • Legislative Research Commission.
d. California Department of Public Health, "Statement of Building Dampness, Mold, and Health" dated 2/2016;
California Department of Public Health Statement on Building Dampness Mold and Health.
e. American Industrial Hygiene Association Position Statement On Mold and Dampness in the Built Environment dated March 2018;
f. Position Statement on Mold and Dampness in the Built Environment (navy.mil).
g. The EPA document "*A Brief Guide to Mold, Moisture and Your Home"*, EPA 402-K-02-003, dated 9/2012; A Brief Guide to Mold, Moisture, and Your Home EPA-402-K-02-003, September 2010.
h. ASHRAE Position Document on Limiting Indoor Mold and Dampness in Buildings, dated June 23, 2021; Position Document (ashrae.org).

7. RECOMMENDATIONS

7.1 Moisture Recommendations

The mold can be removed, but unless the moisture issues that allowed for the mold growth are corrected, visible mold will likely return.

1. Decommission the sub-slab return air ducts and permanently seal the locations.
   a. This would include both ends of the ducts (i.e., at the inlet end and at the AHU end).
   b. Installation of a sump pump may or may not be a useful corrective action.
2. Ensure the efficacy of the south restroom plumbing pipe repair.
3. Extend the breakroom HVAC supply vent boot to terminate below the lay-in ceiling tiles rather than above them to reduce the likelihood of dewpoint moisture.
4. Ensure all HVAC supply flex ducts are properly attached to their corresponding supply vents to reduce the likelihood of dewpoint moisture.
5. Maintain a relative humidity at 30-60% or below at all times. A properly functioning HVAC system is typically sufficient to maintain proper indoor relative humidity levels. Issues with the system's ability to maintain proper indoor relative humidity are typically more evident in the summer months.
6. Consider having a qualified roofing professional evaluate the drive-thru lane overhang for deficiencies and make all recommended repairs (if any).
7. Evaluate windows. Ensure that they are free from leaks.
   a. If sweating is an issue, consider replacing windows with multi-paned windows.
   b. Replace wallpaper on window jambs with a material not prone to mold growth (i.e. marble, plastic, metal, etc.).

7.2 Site Specific Recommendations (Mold Abatement Protocol)

The IEP Group's recommendations are based upon the observations and results found herein. The IEP Group, LLC recommends that the contractor consult the IICRC S500 and S520 and perform the industry standard of care in their response.

<u>General</u>

1. Operate several HEPA-equipped AFDs in recirculation mode to scrub the air free of possible mold spores and dust while work is being performed.
   a. When work is completed, continue to operate the AFDs an additional 48 hours or until post testing results are returned.
2. Perform a final janitorial cleaning of the entire subject property, including general dusting and HEPA vacuuming of large horizontal surfaces such as floors, tables, counters, etc.
   a. Note: this is a janitorial cleaning only of exposed surfaces. Detailed mold abatement cleaning should not be necessary.

HVAC Closet

3. Establish the HVAC closet as a work area under containment.
    a. Seal the entry door with a zipper barrier.
        i. Place a tacky mat outside the zipper barrier to reduce the likelihood of dispersing possible mold spores and dust.
    b. Seal all HVAC vents and critical barriers.
    c. Establish the containment under negative pressure using an AFD exhausting to the outdoors.
        i. When work is completed, switch the AFD to recirculation mode and continue to operate the AFD an additional 48 hours or until post testing results are returned.
4. Remove all main trunkline exterior insulation on trunklines in the HVAC closet.
    a. It should not be necessary to remove the extended locations of the supply trunklines in the ceiling cavity beyond the HVAC closet.
    b. Care should be taken to not disturb the ACM white HVAC seam tape while removing the insulation unless performed by a licensed and trained asbestos professional.
5. Perform a final cleaning of the entire work area from the ceiling down, including HEPA vacuuming and wet wiping using the "three-wipe-and-fold" method such that the cleaning rag is never placed back into the cleaning solution (i.e., wet the rag, wipe, fold the rag, wipe, fold the rag, wipe, discard the rag).
    a. All exposed surfaces should be included in the cleaning.

Drive-thru Teller Office

6. Operate a HEPA-equipped AFD in proximity to work to be performed.
7. Clean the location behind the drive-thru teller counter free of all dust and construction debris.
8. To eliminate possible settled spores due to elevated airborne mold spore counts, perform a final cleaning of the office from the walls down, including HEPA vacuuming and wet wiping using the "three-wipe-and-fold" method such that the cleaning rag is never placed back into the cleaning solution (i.e., wet the rag, wipe, fold the rag, wipe, fold the rag, wipe, discard the rag).

Break Room

9. Consider replacing the sink cabinet base shelf.
    a. If this recommendation is followed, perform the following:
        i. Operate a HEPA-equipped AFD in proximity to the work being performed.
        ii. Clean the exposed space below the removed shelf free of all possible mold, dust, and debris.
        iii. Perform a final cleaning of the general work location, including HEPA vacuuming and wet wiping using the "three-wipe-and-fold" method such that the cleaning rag is never placed back into the cleaning solution (i.e., wet the rag, wipe, fold the rag, wipe, fold the rag, wipe, discard the rag).

Interior Windows

10. Place plastic sheeting on the ground and operate an AFD in proximity to the work.
11. Remove wallpaper from the window jambs.
12. Clean (HEPA-vacuum, wet wipe, scrub, etc.) the jambs free from mold growth.
13. Apply an antimicrobial encapsulant (i.e. paint) to the jambs.
    a. If a new material is installed in place of wallpaper, utilize a product not prone to mold growth, or simply leave the jambs painted.

HVAC

14. Discard all supply flex ducts.
    a. Seal the ends of the flex ducts before removing to reduce the likelihood of dispersing mold spores during transport.
15. Clean the remaining components of the HVAC systems (including the AHUs, and all related ductwork, diffusers, grilles, etc.) according to the latest NADCA ACR guidelines.
    a. In lieu of cleaning, components may be removed and replaced with new.
16. As a precaution, clean the general location of each return air inlet free of all possible mold, dust, and debris (within ~ 3' of the inlet/grille).
    a. The cleaning should include HEPA vacuuming and wet wiping using the "three-wipe-and-fold" method such that the cleaning rag is never placed back into the cleaning solution (i.e., wet the rag, wipe, fold the rag, wipe, fold the rag, wipe, discard the rag).
    b. Operate a HEPA-equipped AFD in proximity to each location as the cleaning is being performed.

Asbestos Recommendations

17. **The white HVAC seam tape should only be handled/disturbed by a licensed and trained asbestos professional.**
18. The contractor and his onsite supervisor should be aware of the materials tested within this report and treat newly identified materials as containing asbestos unless they are tested and proven otherwise.
19. If other suspect asbestos-containing materials are to be disturbed, they must be tested prior to disturbance or presumed to contain asbestos and handled according to all state, local, and federal regulations.

7.3 General Guidelines for Fungal Contamination

1. Remove fungal affected porous building products (i.e., fiberglass, carpet, drywall, etc.) supporting the visible growth of mold. If areas visibly affected by mold exist beyond the scope of work, continue removal plus an ~2-foot buffer in every direction.
2. Scrub/sand visible mold, enzyme staining, and category 3 affected materials from structurally uncompromised wooden structural members plus an ~2-foot buffer in every direction. Compromised structural members should be removed and replaced. Consult with a structural engineer prior to removing any structural member.
3. Clean and disinfect mold growth on surfaces of any nonporous building materials or nonporous contents (i.e., metal, porcelain, etc.) or semi-porous such as concrete slab. Qualified surfaces supporting the visible growth of mold or that have contacted category 3 water should be disinfected with an appropriate and compatible EPA-certified disinfectant. Follow the manufacturer's specifications for appropriate concentrations and contact time.
4. Discard visibly mold-affected porous contents (i.e., clothes, upholstered furniture, etc.).
5. Throughout the containment, after all affected materials have been removed, HEPA vacuum, dust and wet wipe exposed walls and horizontal surfaces. Wet wiping and/or HEPA vacuuming and the placement of HEPA air scrubbers should effectively reduce the spore count on surfaces to background levels. HEPA cleaning is not to be performed in lieu of visible mold abatement but instead as part of a mold remediation plan.
6. Work should be in compliance with the Institute of Inspection Cleaning and Restoration Certification (IICRC) *"S520 Standard and Reference Guide for Professional Mold Remediation*" and/or the EPA recommendation "*Mold Remediation in Schools and Commercial Buildings*" EPA 402-K-01-001 reprinted 9/ 2008; (www.epa.gov/mold/mold_remedition.html).
7. A contractor that is knowledgeable and trained in conducting the necessary work should perform all mold-related services. The selected contractor should use state-of-the-art engineering controls (pre-cleaning, work area isolation, negative pressure enclosure, HEPA air filtration, decontamination chambers, signage, etc.) and personal protective equipment as necessary while performing said services.
8. Perform under negative pressure and seal all critical barriers prior to start of abatement.
   a. Typically, a one-stage decontamination chamber or greater and a sticky mat outside of the chamber are recommended to prevent tracking of contaminated materials.
9. A top-to-bottom wipe down/cleaning and visual inspection of the entire containment should occur by the contractor prior to the final PMRV.
   a. The selected contractor should verify that there is no visible mold, building materials are dry, no dust and debris remains within or immediately outside the contained work area, and per KAR 2:330 that there are no more musty odors.
10. Post mold remediation verification (PMRV) testing, both visual and analytical, should be performed to insure a return to background environmental conditions. PMRV inspections are evaluated on five (5) criteria. If all five of these criteria are met, the post mold abatement is acceptable (passes). If any of the criteria is not met, the post mold abatement is not acceptable (fails).
    i. Absence of visible dust and debris within the containment;
    ii. Absence of visible mold within the containment;
    iii. According to the IICRC S500 12.4.1.5 (2006), wood structural members should be below 16% moisture content prior to reconstruction. Building materials within the containment should be less than 16% moisture content and/or drier than the dry standard for the subject property;
    iv. General absence of mold odors per KAR 2:330 section 5 (2) e.
    v. Balance of airborne mold spores inside when compared to airborne mold spores outside based on both the total spore count and the hierarchy of spores detected.

8. LIMITATIONS

The field observations, measurements, and research reported herein are considered sufficient in detail and scope to form a reasonable basis for a Limited Initial Mold Investigation of the affected areas at the subject property. The assessment, conclusions, and recommendations presented herein are based upon the subjective evaluation of limited data. They may not represent all conditions at the subject site as they reflect the information gathered from specific locations. The IEP Group, LLC warrants the findings and conclusions contained herein have been promulgated in accordance with generally accepted industrial hygiene methodology and only for the site described in this report.

8.1 Use by Third Parties

This report was prepared pursuant to the contract The IEP Group, LLC has with the client. That contractual relationship included an exchange of information about the subject site that was unique and between The IEP Group, LLC and its client and serves as the basis upon which this report was prepared. Because of the importance of communication between The IEP Group, LLC and its client, reliance on or any use of this report by anyone other than the client, for whom it was prepared, is prohibited and therefore not foreseeable to The IEP Group, LLC.

Reliance on or use by any such third party without explicit authorization in the report does not make said third party a third-party beneficiary to The IEP Group's contract with the client. Any such unauthorized reliance on or use of this report, including any of its information or conclusions, will be at the third party's risk. For the same reasons, no warranties or representations, expressed or implied in this report, are made to any such third party.

8.2 Unidentifiable Conditions

This Limited Initial Mold Investigation has been developed to provide the client with information regarding apparent conditions relating to the subject property. Although The IEP Group, LLC believes that the findings and conclusions provided in this report are reasonable, the assessment is necessarily limited to the conditions observed and to the information available at the time of the work. Due to the nature of the work, there is a possibility conditions exist that could not be identified within the scope of the assessment or which were not apparent at the time of our site work. The assessment is also limited to information available from the client at the time it was conducted. It is also possible that the testing methods employed at the time of the report may later be superseded by other methods. The IEP Group, LLC does not accept responsibility for changes in the state of the art.

The IEP Group, LLC does not guarantee that all contaminated areas in the subject property were recognized during our evaluation. This report is limited only to the samples taken and locations sampled. Additional sampling may be needed to further identify other pollutants, or other mold/ fungus affected areas inside the property.

We have employed state-of-the-art practices to perform this analysis of risk and identification, but this evaluation is limited in scope to the areas listed above. Our services consist of professional opinions and recommendations made in accordance with generally accepted engineering principles and practices and are designed to provide an analytical tool to assist the client.

The IEP Group, LLC or those representing The IEP Group, LLC bear no responsibility for the actual condition of the structure or safety of a site pertaining to IAQ contamination regardless of the actions taken by the client.

Thank you for choosing The IEP Group, LLC to provide professional consulting services. If for any reason you have any questions regarding this report, please do not hesitate to contact us.

Thank you,
The IEP Group LLC

Written by:

Charles Van Allen, CIE
Indoor Environmental Professional
AHERA Asbestos Building Inspector

Reviewed and Edited by:

Terry L. Wasson

Co-written by:

Robert E. Crawley, CIEC
Industrial Hygiene Consultant
AHERA Management Planner and EPA Inspector/ Risk Assessor

9. SITE PHOTOS

9.1 June 14, 2024 Photos

Photo 1: Subject property overview – 130 S Buckman Street, Shepherdsville, KY – front (north) elevation

Photo 2: Outdoor air sample 01 location

Photo 3: Southwest office air sample 02 location

Photo 4: Lobby air sample 03 location

Photo 5: Drive-thru office air sample 04 location

Photo 6: Northeast vault – no deficiencies regarding mold growth noted.

Photo 7: Storage closet – no deficiencies regarding mold growth noted.

Photo 8: South restroom – reported plumbing leak repair location

Photo 9: South restroom – tested location of plaster wall at reported plumbing leak location measured dry (202 REL)

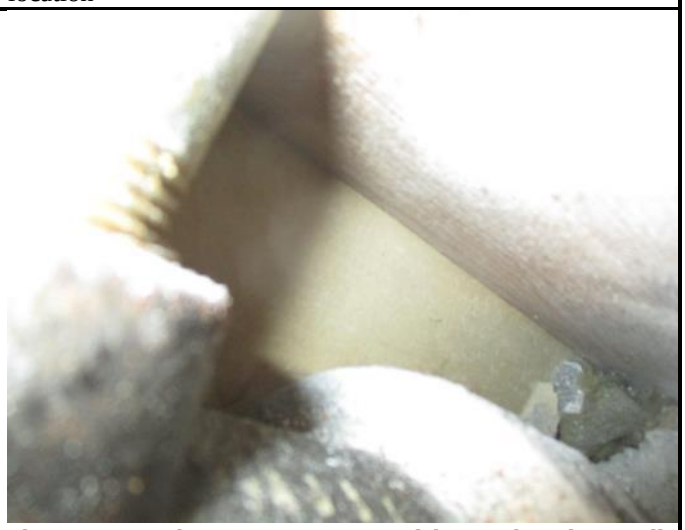

Photo 10: South restroom – exposed button board in wall cavity appears generally clean

Photo 11: North restroom – example of damaged south wall plaster & button board wall above toilet

Photo 12: North restroom – tested location of damaged plaster & button board wall measured dry (155 REL)

Photo 13: Break room – overview

Photo 14: Break room – tested location of affected sink cabinet base shelf measured dry (114 REL)

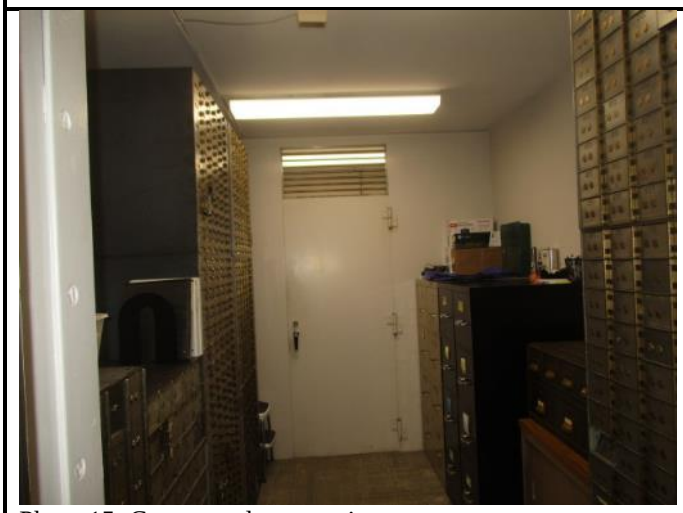

Photo 15: Center vault – overview

Photo 16: Lobby – tested location of wall below typical window measured dry (115 REL)

Photo 17: Lobby – example of minor mold growth behind lower edge of wallpaper at windowsill

Photo 18: Drive-thru teller office – view of HEPA air filter

Photo 19: HVAC closet – overview

Photo 20: HVAC closet – example of main trunk line exterior insulation (negative for asbestos)

Photo 21: HVAC closet – example of white HVAC seam tape **(40% Chrysotile asbestos)**

Photo 22: HVAC closet – example of visible mold on plaster wall

Photo 23: North HVAC AHU – overview

Photo 24: North HVAC AHU – example of minor visible mold on chill coils

Photo 25: North HVAC AHU – air filter is improperly fit – no cover on filter slot

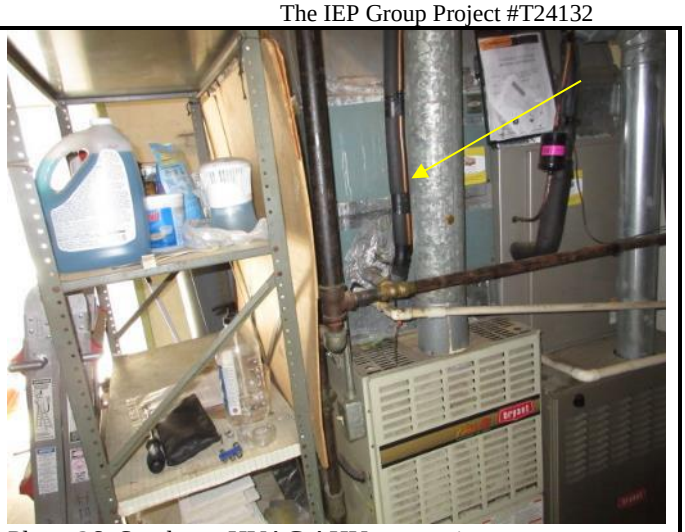

Photo 26: Southeast HVAC AHU – overview

Photo 27: Southeast HVAC AHU – heavy accumulations of mold on AHU interior insulation

Photo 28: Southeast HVAC AHU – example of visible mold on supply trunk boot

Photo 29: Southwest AHU – the AHU appears to service the same main supply trunk as the southeast AHU

Photo 30: Southwest AHU – overview

Photo 31: Southwest AHU – example of minor suspect mold on chill coils

Photo 32: Southwest AHU – example of visible mold on main supply trunk boot (shared by southeast AHU)

Photo 33: HVAC – example of visible mold on supply vent diffuser outside south restroom

Photo 34: HVAC – louvres for supply vent diffuser outside south restroom are closed

Photo 35: HVAC – example of detached supply flex duct at supply vent diffuser at building rear entry

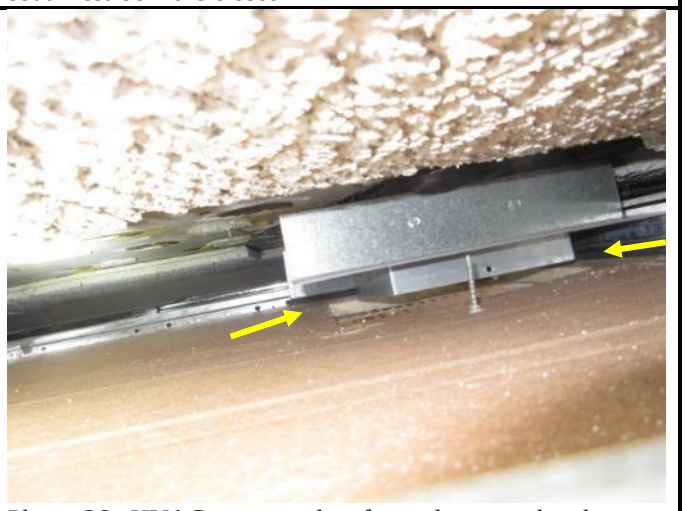

Photo 36: HVAC – example of gap between break room supply vent boot and lay-in ceiling tiles

9.2 June 24, 2024 Photos

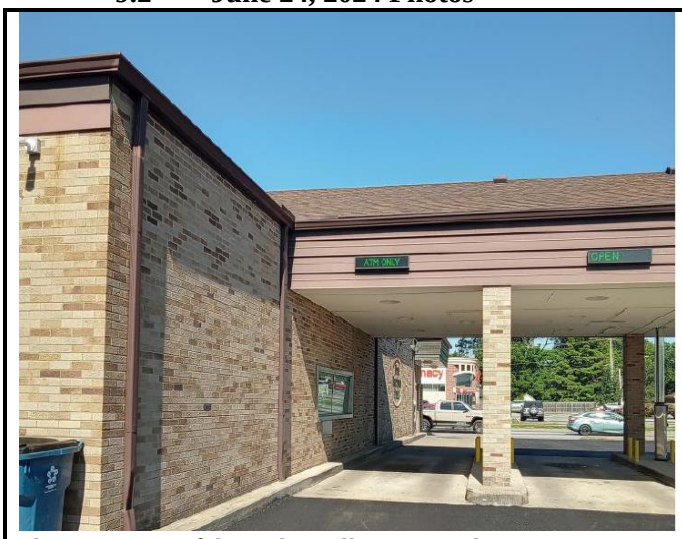

Photo 1: View of drive-thru teller exterior location

Photo 2: Example of apparent water damage on drive-thru overhang panels

Photo 3: No access to the exterior overhang from within the building as viewed from the drive-thru teller office ceiling cavity

Photo 4: View of drive-thru teller office north wall

Photo 5: Example of dust and construction debris behind drive-thru teller counter

Photo 6: Tested location of drive-thru teller office north wall measured dry (114 REL)

Photo 7: Exposed drive-thru teller office north wall lower drywall appears generally clean

Photo 8: Tested location of exposed drive-thru teller office north wall measured dry (< 16% - typical)

Photo 9: View of drive-thru teller office west wall below HVAC return air inlet

Photo 10: Example of suspect mold on lower plaster and sill plate below drive-thru teller office west return air inlet

Photo 11: View of exploratory view hole made in drive-thru teller north wall

Photo 12: Exposed location of north wall cavity appears generally clean (as viewed through view hole)

Photo 13: View of drive-thru teller office HVAC west return air inlet

Photo 14: Example of standing water in drive-thru teller office HVAC west return air duct

Photo 15: View of lobby HVAC return air inlet

Photo 16: Example of standing water in lobby HVAC return air duct

Photo 17: View of building rear entry HVAC return air inlet

Photo 18: Example of standing water in building rear entry HVAC return air duct

10. ATTACHMENTS

EMSL Analytical, Inc.

706 Gralin Street Kernersville, NC 27284
Tel/Fax: (336) 992-1025 / (336) 992-4175
http://www.EMSL.com / kernersvillelab@emsl.com

EMSL Order: 022403382
Customer ID: TRTH25
Customer PO: T24132
Project ID:

Attention: Robert Crawley
The IEP Group, LLC
838 East High Street #309
Lexington, KY 40502

Project: 1st Harrison Bank Shepherdsville, KY

Phone: (859) 940-3466
Fax:
Collected Date:
Received Date: 06/17/2024 09:30 AM
Analyzed Date: 06/18/2024

Test Report:Air-O-Cell(™) Analysis of Fungal Spores & Particulates by Optical Microscopy (Methods MICRO-SOP-201, ASTM D7391)

Lab Sample Number:	022403382-0001			022403382-0002			022403382-0003		
Client Sample ID:	01			02			03		
Volume (L):	90			90			90		
Sample Location:	Outdoor Air			Office			Lobby		
Spore Types	Raw Count†	Count/m³	% of Total	Raw Count†	Count/m³	% of Total	Raw Count†	Count/m³	% of Total
Alternaria (Ulocladium)	6	200	0.9	-	-	-	-	-	-
Ascospores	21	740	3.2	2	70	5.8	6	200	10.6
Aspergillus/Penicillium++	7	200	0.9	8	300	24.8	1	40	2.1
Basidiospores	126(546)	19200	82.3	21	740	61.2	42	1500	79.8
Bipolaris++	-	-	-	-	-	-	-	-	-
Chaetomium++	-	-	-	-	-	-	-	-	-
Cladosporium	69	2400	10.3	4	100	8.3	4	100	5.3
Curvularia	-	-	-	-	-	-	1	10*	0.5
Epicoccum	1	10*	0	-	-	-	-	-	-
Fusarium++	-	-	-	-	-	-	-	-	-
Ganoderma	1	10*	0	-	-	-	-	-	-
Myxomycetes++	2	70	0.3	-	-	-	2	20*	1.1
Pithomyces++	1	10*	0	-	-	-	-	-	-
Rust	5	200	0.9	-	-	-	-	-	-
Scopulariopsis/Microascus	-	-	-	-	-	-	-	-	-
Stachybotrys/Memnoniella	-	-	-	-	-	-	-	-	-
Cercospora++	1	10*	0	-	-	-	-	-	-
Nigrospora	1	10*	0	-	-	-	-	-	-
Polythrincium	6	200	0.9	-	-	-	1	10*	0.5
Torula++	1	10*	0	-	-	-	-	-	-
Zygophiala/Schizothyrium	2	70	0.3	-	-	-	-	-	-
Total Fungi	**670**	**23340**	**100**	**35**	**1210**	**100**	**57**	**1880**	**100**
Hyphal Fragment	-	-	-	-	-	-	-	-	-
Insect Fragment	-	-	-	-	-	-	-	-	-
Pollen	1	10*	-	1	40	-	-	-	-
Analyt. Sensitivity 600x	-	35	-	-	35	-	-	35	-
Analyt. Sensitivity 300x	-	11*	-	-	11*	-	-	11*	-
Skin Fragments (1-4)	-	-	-	-	1	-	-	1	-
Fibrous Particulate (1-4)	-	1	-	-	1	-	-	1	-
Background (1-5)	-	1	-	-	1	-	-	1	-

† Due to method stopping rules, extrapolated raw counts are reported in parenthesis.

++ Includes other spores with similar morphology; see EMSL's fungal glossary for each specific category.

No discernable field blank was submitted with this group of samples.

Kristie Elliott

Kristie Elliott, Microbiology Laboratory Manager
or other Approved Signatory

Initial report from: 06/18/2024 03:30 PM

For information on the fungi listed in this report, please visit the Resources section at www.emsl.com

EMSL Analytical, Inc.

706 Gralin Street Kernersville, NC 27284
Tel/Fax: (336) 992-1025 / (336) 992-4175
http://www.EMSL.com / kernersvillelab@emsl.com

EMSL Order: 022403382
Customer ID: TRTH25
Customer PO: T24132
Project ID:

Attention: Robert Crawley
The IEP Group, LLC
838 East High Street #309
Lexington, KY 40502

Project: 1st Harrison Bank Shepherdsville, KY

Phone: (859) 940-3466
Fax:
Collected Date:
Received Date: 06/17/2024 09:30 AM
Analyzed Date: 06/18/2024

Test Report:Air-O-Cell(™) Analysis of Fungal Spores & Particulates by Optical Microscopy (Methods MICRO-SOP-201, ASTM D7391)

Lab Sample Number:	022403382-0004								
Client Sample ID:	04								
Volume (L):	90								
Sample Location:	Drive Thru Teller								
Spore Types	**Raw Count†**	**Count/m³**	**% of Total**	-	-	-	-	-	-
Alternaria (Ulocladium)	-	-	-	-	-	-	-	-	-
Ascospores	5	200	3.1	-	-	-	-	-	-
Aspergillus/Penicillium++	108(128)	4500	70.3	-	-	-	-	-	-
Basidiospores	41	1400	21.9	-	-	-	-	-	-
Bipolaris++	-	-	-	-	-	-	-	-	-
Chaetomium++	-	-	-	-	-	-	-	-	-
Cladosporium	8	300	4.7	-	-	-	-	-	-
Curvularia	-	-	-	-	-	-	-	-	-
Epicoccum	-	-	-	-	-	-	-	-	-
Fusarium++	-	-	-	-	-	-	-	-	-
Ganoderma	-	-	-	-	-	-	-	-	-
Myxomycetes++	-	-	-	-	-	-	-	-	-
Pithomyces++	-	-	-	-	-	-	-	-	-
Rust	-	-	-	-	-	-	-	-	-
Scopulariopsis/Microascus	-	-	-	-	-	-	-	-	-
Stachybotrys/Memnoniella	-	-	-	-	-	-	-	-	-
Cercospora++	-	-	-	-	-	-	-	-	-
Nigrospora	-	-	-	-	-	-	-	-	-
Polythrincium	-	-	-	-	-	-	-	-	-
Torula++	-	-	-	-	-	-	-	-	-
Zygophiala/Schizothyrium	-	-	-	-	-	-	-	-	-
Total Fungi	**182**	**6400**	**100**	-	-	-	-	-	-
Hyphal Fragment	-	-	-	-	-	-	-	-	-
Insect Fragment	-	-	-	-	-	-	-	-	-
Pollen	-	-	-	-	-	-	-	-	-
Analyt. Sensitivity 600x	-	35	-	-	-	-	-	-	-
Analyt. Sensitivity 300x	-	11*	-	-	-	-	-	-	-
Skin Fragments (1-4)	-	1	-	-	-	-	-	-	-
Fibrous Particulate (1-4)	-	1	-	-	-	-	-	-	-
Background (1-5)	-	1	-	-	-	-	-	-	-

† Due to method stopping rules, extrapolated raw counts are reported in parenthesis.

++ Includes other spores with similar morphology; see EMSL's fungal glossary for each specific category.

No discernable field blank was submitted with this group of samples.

Kristie Elliott

Kristie Elliott, Microbiology Laboratory Manager
or other Approved Signatory

Initial report from: 06/18/2024 03:30 PM

For information on the fungi listed in this report, please visit the Resources section at www.emsl.com

EMSL Analytical, Inc.

706 Gralin Street Kernersville, NC 27284
Tel/Fax: (336) 992-1025 / (336) 992-4175
http://www.EMSL.com / kernersvillelab@emsl.com

EMSL Order: 022403382
Customer ID: TRTH25
Customer PO: T24132
Project ID:

Attention: Robert Crawley
The IEP Group, LLC
838 East High Street #309
Lexington, KY 40502

Project: 1st Harrison Bank Shepherdsville, KY

Phone: (859) 940-3466
Fax:
Collected Date:
Received Date: 06/17/2024
Analyzed Date: 06/18/2024

Test Report: Microscopic Examination of Fungal Spores, Fungal Structures, Hyphae, and Other Particulates from Tape Samples (EMSL Method MICRO-SOP-200)

Lab Sample Number: / Client Sample ID: / Sample Location:	022403382-0005 T01 HVAC Closet Walls	022403382-0006 T02 Exterior HVAC Duct Ins.	022403382-0007 T03 SE AHU Interior Ins.	022403382-0008 T04 Flex Ducts (S Unit / Side)	022403382-0009 T05 Flex Duct (Drive Thru - N Unit)
Spore Types	Category	Category	Category	Category	Category
Alternaria (Ulocladium)	Low	Low	-	Low	Low
Ascospores	Low	Rare	-	Rare	Rare
Aspergillus/Penicillium++	-	-	High	-	-
Basidiospores	Rare	Low	-	-	Rare
Bipolaris++	Rare	Rare	-	Rare	Rare
Chaetomium++	Rare	Rare	Rare	Rare	-
Cladosporium	*Low*	*Low*	*High*	*High*	*Medium*
Curvularia	Rare	Rare	Rare	Rare	-
Epicoccum	Rare	Rare	Rare	Low	Low
Fusarium++	-	-	-	-	-
Ganoderma	Rare	Rare	-	-	-
Myxomycetes++	Rare	Low	-	Rare	Low
Pithomyces++	Rare	Rare	-	Low	Rare
Rust	Rare	Rare	-	Rare	Rare
Scopulariopsis/Microascus	-	-	-	-	-
Stachybotrys/Memnoniella	Low	-	-	-	-
Unidentifiable Spores	-	-	-	-	-
Cercospora++	-	Rare	-	-	-
Nigrospora	Rare	Rare	Rare	Rare	Rare
Pestalotia++	-	-	-	Rare	-
Spegazzinia	Rare	Rare	-	Rare	-
Sporidesmium++	-	Rare	-	-	-
Tetraploa	-	-	-	-	Rare
Torula++	-	Rare	-	-	Rare
Triadelphia	-	-	-	-	Rare
Zygophiala/Schizothyrium	Rare	-	-	-	-
Hyphal Fragment	-	-	-	-	-
Insect Fragment	Rare	-	-	Rare	-
Pollen	Low	Rare	Rare	Rare	Rare
Fibrous Particulate	Low	Medium	-	-	-

Category: Count/per area analyzed - Rare: 1 to 10 Low: 11 to 100 Medium: 101 to 1000 High: >1000

- Denotes Not Detected.
++ Includes other spores with similar morphology; see EMSL's fungal glossary for each specific category.
* = Sample contains fruiting structures and/or hyphae associated with the spores.

Kristie Elliott, Microbiology Lab Manager
or other Approved Signatory

No discernable field blank was submitted with this group of samples.

Initial report from: 06/18/2024 03:30 PM

For information on the fungi listed in this report, please visit the Resources section at www.emsl.com

EMSL Analytical, Inc.
706 Gralin Street Kernersville, NC 27284
Tel/Fax: (336) 992-1025 / (336) 992-4175
http://www.EMSL.com / kernersvillelab@emsl.com

EMSL Order: 022403382
Customer ID: TRTH25
Customer PO: T24132
Project ID:

Attention: Robert Crawley
The IEP Group, LLC
838 East High Street #309
Lexington, KY 40502

Phone: (859) 940-3466
Fax:
Received Date: 06/17/2024 9:30 AM
Analysis Date: 06/18/2024
Collected Date:

Project: 1st Harrison Bank Shepherdsville, KY

Test Report: Asbestos Analysis of Bulk Materials via AHERA Method 40CFR 763 Subpart E Appendix E supplemented with EPA 600/R-93/116 using Polarized Light Microscopy

			Non-Asbestos		Asbestos
Sample	**Description**	**Appearance**	**% Fibrous**	**% Non-Fibrous**	**% Type**
A01 *022403382-0010*	Seam Tape	Gray Fibrous Homogeneous	15% Cellulose	45% Non-fibrous (Other)	**40% Chrysotile**
A02 *022403382-0011*	Seam Tape				**Positive Stop (Not Analyzed)**
A03-Wrap/Tar *022403382-0012*	HVAC Duct Insulation	Black/Beige Fibrous Heterogeneous	8% Cellulose 2% Glass	90% Non-fibrous (Other)	None Detected
A03-Insulation *022403382-0012A*	HVAC Duct Insulation	Yellow Fibrous Homogeneous	99% Glass	1% Non-fibrous (Other)	None Detected
A04-Wrap/Tar *022403382-0013*	HVAC Duct Insulation	White/Black Fibrous Heterogeneous	10% Cellulose	90% Non-fibrous (Other)	None Detected
A04-Insulation *022403382-0013A*	HVAC Duct Insulation	Yellow Fibrous Homogeneous	98% Glass	2% Non-fibrous (Other)	None Detected

Analyst(s)
Cameron Evans (2)
Jurnee West (3)

Stephen Bennett, Laboratory Manager
or Other Approved Signatory

Initial report from: 06/18/2024 16:19:46

TRTH25

022403382

The IEP Group, LLC
Mailing: 838 E. High Street, #309, Lexington, KY 40502
Phone: (859) 940-3466

Project # T24132 **Name:** 1st Harrison Bank **Address:** Shepherdsville, KY	**Lab:** EMSC	**Sampled by:** Rob Crawley **Email To:** robertc@theiepgroup.com charlesva@theiepgroup.com benw@theiepgroup.com

Sample ID	Sample Description	Sample Location	Analysis Requested	Volume/ Area	Collected Date	Collected Flow	Collected Time	Turn Around Time
01	Air O Cell Mold	Outdoor Air	Direct Microscopy	90 L	6/14/24	15 L/m	6m	48hr
02	↓	Office	↓	↓	↓	↓	↓	↓
03	↓	Lobby	↓	↓	↓	↓	↓	↓
04	↓	Drive Thru Teller	↓	↓	↓	↓	↓	↓
T01	Tape Lift Mold	HVAC Closet Walls	Direct Microscopy		6/14/24			48hr
T02	↓	Exterior HVAC Duct Ins.	↓		↓			↓
T03	↓	SE AHU Interior Ins.	↓		↓			↓
T04	↓	Flex Ducts (S Unit/Side)	↓		↓			↓
T05	↓	Flex Duct (Drive Thru - N Unit)	↓		↓			↓

Relinquished By: Charles VanAcker	Date: 6/14/2024	Time: 1437
Received By: Jen Sweet	6-17-24	9:30
Relinquished By:		
Received By:		

The IEP Group Chain of Custody

DEFX 7168 4590 7333

3382

The IEP Group, LLC
Mailing: 838 E. High Street, #309, Lexington, KY 40502
Phone: (859) 940-3466

Project # T24132
Name: 1st Harrison Bank
Address: Shepherdsville Ky

Lab: EMSL

Sampled by: Charles Van Allen

Email To:
robertc@theiepgroup.com benw@theiepgroup.com
charlesva@theiepgroup.com

Sample ID	Sample Description	Sample Location	Analysis	Qty.	Date	HA	Friable?	Turn Around
A01	Seam Tape	N AHU	PLM	TBD	6/14/24	1	Y	48 hr
A02	⊥	SE AHU		⊥		1	Y	
A03	HVAC Duct Insulation	SE AHU		58 LFt		2	Y	
A04	⊥	N AHU		⊥		2	Y	

Relinquished By: CHARLES VAN ALLEN Date: 6/14/2024 Time: 1437
Received By:
Relinquished By:
Received By:

Stop at 1st Positive

The IEP Group Chain of Custody

Page 1 of 1

General Finish Plan Notes:

1. CONTRACTOR IS RESPONSIBLE TO PROVIDE A SMOOTH AND LEVEL TRANSITION BETWEEN DIFFERENT FLOOR FINISHES. CONTRACTOR TO PROVIDE TRANSITION STRIP BETWEEN ALL DISSIMILAR FLOORING MATERIALS. SEE THIS SHEET FOR DETAILS.
2. ALL NOTATIONS ARE INTENDED TO INDICATE FINISHES FOR ENTIRE AREA OF ITEM-AND ALL EXPOSED SURFACES. INCLUDING WALL-TO-WALL, FLOOR-TO-CEILING, ENTIRE LENGTH OF SURFACE, ALL SIDES, ALL EDGES, AND ALL ASSOCIATED COMPONENTS, UNLESS OTHERWISE NOTED.
3. ALL COLUMNS IN ROOMS AND AREAS ARE TO BE FINISHED TO MATCH WALL SURFACES OF THAT SPACE OR ADJACENT WALLS, UNLESS OTHERWISE NOTED.
4. SEE REFLECTED CEILING PLANS FOR ALL CEILING HEIGHTS AND CLARIFICATION OF MATERIALS.
5. TRANSITIONS BETWEEN DISSIMILAR FLOORING MATERIALS SHOULD OCCUR AT CENTER LINE OF DOOR OPENING. U.O.N
6. INSTALL ALL MATERIALS PER MANUFACTURER'S RECOMMENDATIONS INCLUDING ADHESIVES AND PRIMERS.

FINISH SCHEDULE

Flooring

C1 — MODULAR CARPET TILE-
"J & J FLOORING"
18" X 36"
PATTERN- ANALYTIC DIFFUSE
COLOR- 3597 COOL BRICK
INSTALLATION- ASHLAR

C2 — MODULAR WALK-OFF CARPET TILE-
"J & J FLOORING"
24" X 24"
PATTERN- CATWALK II
COLOR- 1427 SPOTLIGHT
INSTALLATION- QUARTER TURN

V1 — LUXURY VINYL TILE-
"SHAW CONTRACT"
18" X 18"
PATTERN- CROSSING PATHS 5.0
COLOR- 91240 SANDY DUNE
INSTALLATION- MONOLITHIC

V2 — LUXURY VINYL TILE-
"SHAW CONTRACT"
9" X 36"
PATTERN- IN UNISON 5.0
COLOR- 91240 SANDY DUNE
INSTALLATION- ASHLAR

PT1 — PORCELAIN TILE-
"PORTOBELLO AMERICA"
12" X 24"
PATTERN- SANDWAVES
COLOR- CHATEAU GRAY
GROUT COLOR- TO BE SELECTED BY ARCHITECT
INSTALLATION- STACKED

SC — SEALED CONCRETE-
"SONNEBORN" "KURE-N-SEAL"
COLOR- CLEAR
(1) COATS FOLLOWING CLEANING & PRIOR TO FINAL INSPECTION

Base

B1 — RUBBER MILLWORK COVE BASE-
"TARKETT" MILLWORK BASE;
COLOR- BURNT UMBER B
PROFILE- REVEAL
4.25" HIGH

NB — NO BASE-
NO FINISH WORK REQUIRED

Walls

P1 — PAINT-
FINISH PAINT, ALL EXPOSED SURFACES;
"SHERWIN WILLIAMS"
COLOR- SW 6196 FROSTY WHITE

P2 — PAINT-
FINISH PAINT, ALL EXPOSED SURFACES;
"SHERWIN WILLIAMS"
COLOR- SW 6871 POSITIVE RED

WC1 — VINYL WALL COVERING-
"KOROSEAL"
PATTERN- DESERT SAND
COLOR- UNCHARTED 5821-38

WC2 — VINYL WALL COVERING-
"KOROSEAL"
PATTERN- DESERT SAND
COLOR- ROASTED PEPPER 5921-64

T1 — PORCELAIN WALL TILE-
"PORTOBELLO AMERICA"
12"X 24"
PATTERN- SANDWAVES
COLOR- MARSHMALLOW
HEIGHT- 7'-0"
INSTALLATION- SEE A401

Ceilings

AC1 — TYPE A ACOUSTICAL CEILING-
SEE SPECIFICATION SECTION 09 51 13

AC2 — TYPE B ACOUSTICAL CEILING-
SEE SPECIFICATION SECTION 09 51 13

GB1 — GYPSUM BAORD CEILING-
FINISH PAINT ALL EXPOSED SURFACES
"SHERWIN WILLIAMS"
COLOR- SW 6196 FROSTY WHITE
SMOOTH TEXTURE AND FINISH REQUIRED

PT — EXISTING CONCRETE CEILING-
FINISH PAINT
"SHERWIN WILLIAMS"
COLOR- SW 6196 FROSTY WHITE

ES — EXPOSED SURFACE-
NO FINISH WORK REQUIRED

Specialties

1 — PLASTIC LAMINATE CASEWORK-
ALL EXPOSED SURFACES;
"WILSONART"
COLOR- HANDSPUN PEARL

2 — SOLID SURFACE COUNTERTOP-
ALL EXPOSED SURFACES;
"CORIAN"
COLOR- PLATINUM

3 — WOOD DOOR & FRAME-
DOOR SPECIES- WHITE BIRCH (PLAIN SLICED)
"MASONITE ARCHITECTURAL" ASPIRO SERIES
STAIN COLOR- NUTMEG
METAL FRAME- FINISH PAINT, ALL EXPOSED SURFACES;
"SHERWIN WILLIAMS"
COLOR- SW 7674 PEPPERCORN

4 — SOLID SURFACE WINDOW SILL-
ALL EXPOSED SURFACES
"CORIAN"
COLOR- GLACIER WHITE

5 — ALUMINUM STOREFRONT-
PRE-FINISHED

6 — QUARTZ COUNTERTOP-
ALL EXPOSED SURFACES;
"CORIAN"
COLOR- NEUTRAL CEMENT

7 — PLASTIC LAMINATE CASEWORK-
ALL EXPOSED SURFACES;
"WILSONART"
COLOR- GRAPHITE NEBULA

8 — PLASTIC LAMINATE CASEWORK-
ALL EXPOSED SURFACES;
"WILSONART"
COLOR- LANDMARK WOOD

9 — HOLLOW METAL DOOR & FRAME-
METAL FRAME- FINISH PAINT, ALL EXPOSED SURFACES EXTERIOR SIDE;
"SHERWIN WILLIAMS"
COLOR- TO BE SELECTED BY ARCHITECT

10 — CORNER GUARD-
"INPRO"
150 HIGH IMPACT CORNER GUARD
FULL HEIGHT, 3" WING
COLOR- TO BE SELECTED BY ARCHITECT

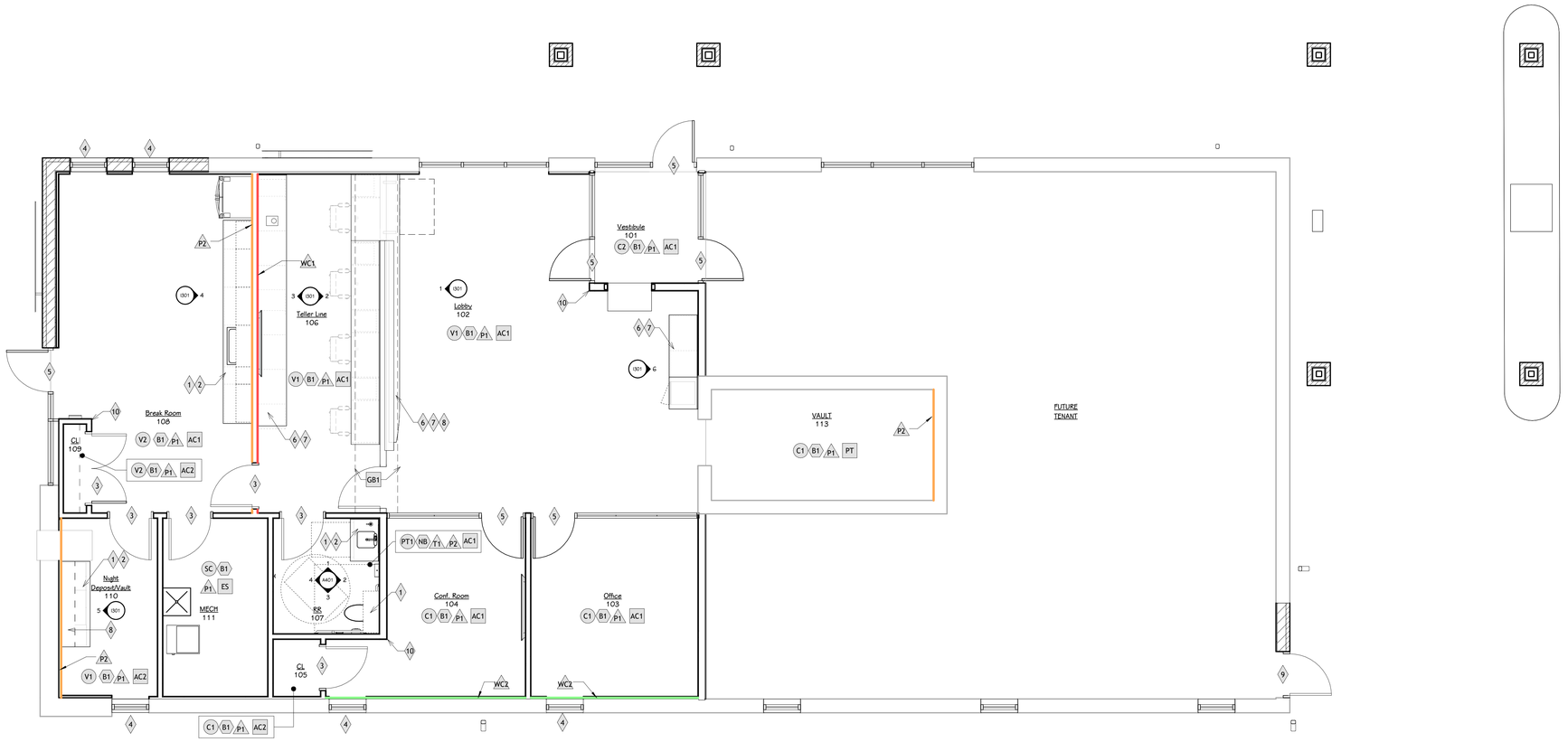

FINISH PLAN
1/4" = 1'-0"

THIS DRAWING SHEET IS INTENDED TO BE PLOTTED IN COLOR. IF THIS TEXT APPEARS IN BLACK AND WHITE, IT IS PLOTTED INCORRECTLY. DISCARD AND OBTAIN AN ACCURATE DRAWING

TowerPinkster
Architecture · Engineering · Interiors
TOWERPINKSTER.COM

ISSUED FOR | DATE

PROJECT TITLE
BUCKMAN ST. BRANCH - 2025 RENOVATIONS

OWNER
FIRST HARRISON BANK

130 S BUCKMAN ST.
SHEPHERDSVILLE, KY
40165

SHEET TITLE
FINISH PLAN

DATE
APRIL 30, 2025

SHEET NUMBER
I101
24-220.000

DRAWN BY: XXX 5/1/2025 8:17:01 AM

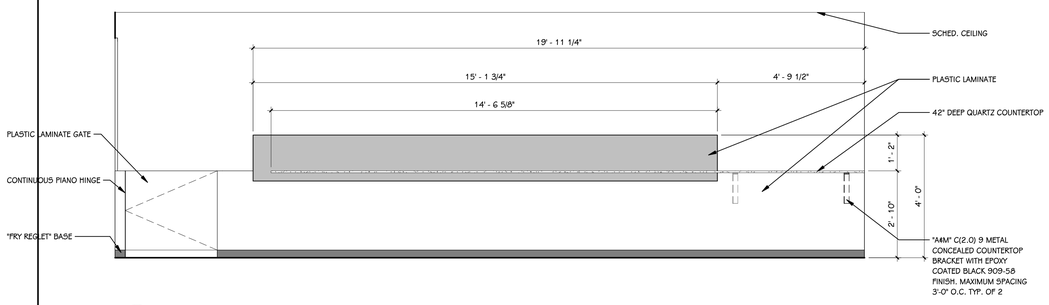

1 / 301 Teller Line West Elevation
1/2" = 1'-0"

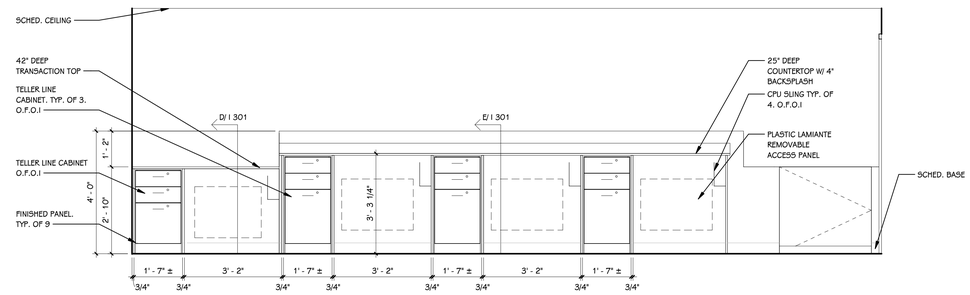

2 / 301 Teller Line East Elevation
1/2" = 1'-0"

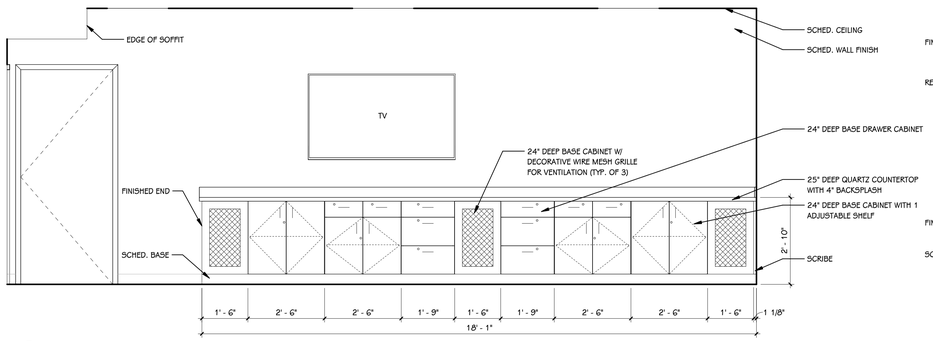

3 / 301 Teller Line Strorage Casework Elevation
1/2" = 1'-0"

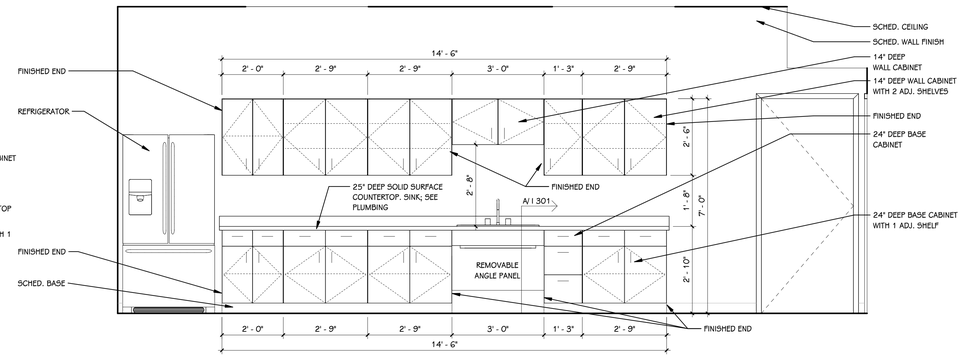

4 / 301 Breakroom Casework Elevation
1/2" = 1'-0"

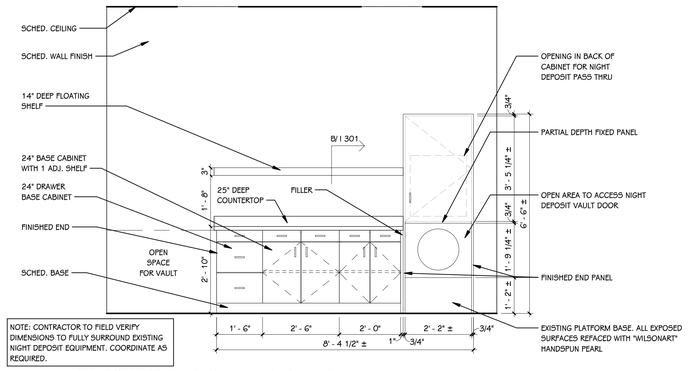

5 / 301 Night Deposit Casework Elevation
1/2" = 1'-0"

Existing Night Deposit Equipment

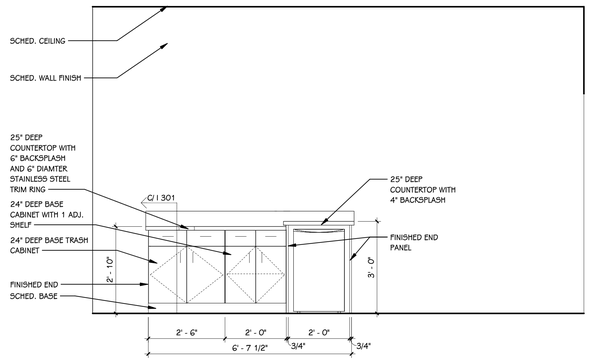

6 / 301 Lobby Casework Elevation
1/2" = 1'-0"

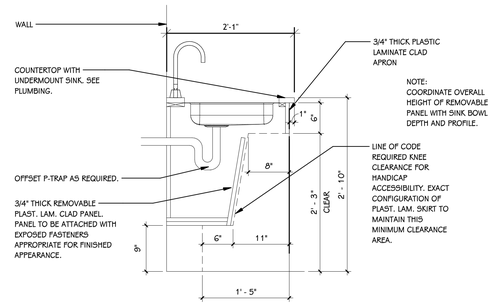

A / 301 Sink Detail
1" = 1'-0"

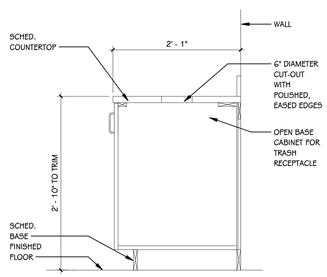

C / 301 Trash Cabinet Detail
1" = 1'-0"

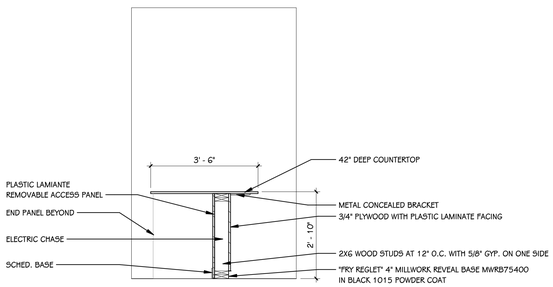

D / 301 ADA Teller Line Detail
1/2" = 1'-0"

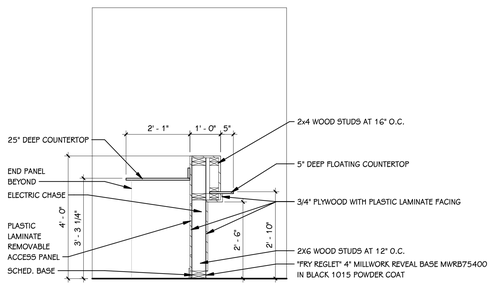

E / 301 Teller Line Detail
1/2" = 1'-0"

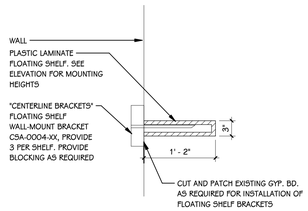

B / 301 Floating Shelf Detail
1" = 1'-0"

THIS DRAWING SHEET IS INTENDED TO BE PLOTTED IN COLOR. IF THIS TEXT APPEARS IN BLACK AND WHITE, IT IS PLOTTED INCORRECTLY. DISCARD AND OBTAIN AN ACCURATE DRAWING

DRAWN BY: XXX 5/1/2025 8:23:39 AM

TowerPinkster
Architecture · Engineering · Interiors
TOWERPINKSTER.COM

ISSUED FOR	DATE

PROJECT TITLE
BUCKMAN ST. BRANCH - 2025 RENOVATIONS

OWNER
FIRST HARRISON BANK

130 S BUCKMAN ST.
SHEPHERDSVILLE, KY
40165

SHEET TITLE
INTERIOR ELEVATIONS

DATE
APRIL 30, 2025

SHEET NUMBER
I301
24-220.000

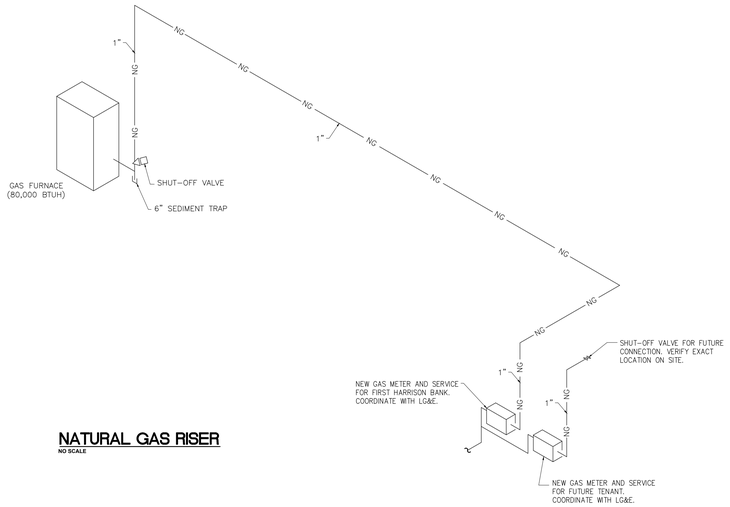

NATURAL GAS RISER

NO SCALE

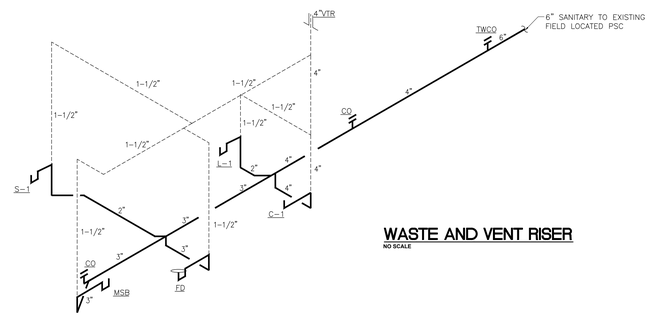

WASTE AND VENT RISER

NO SCALE

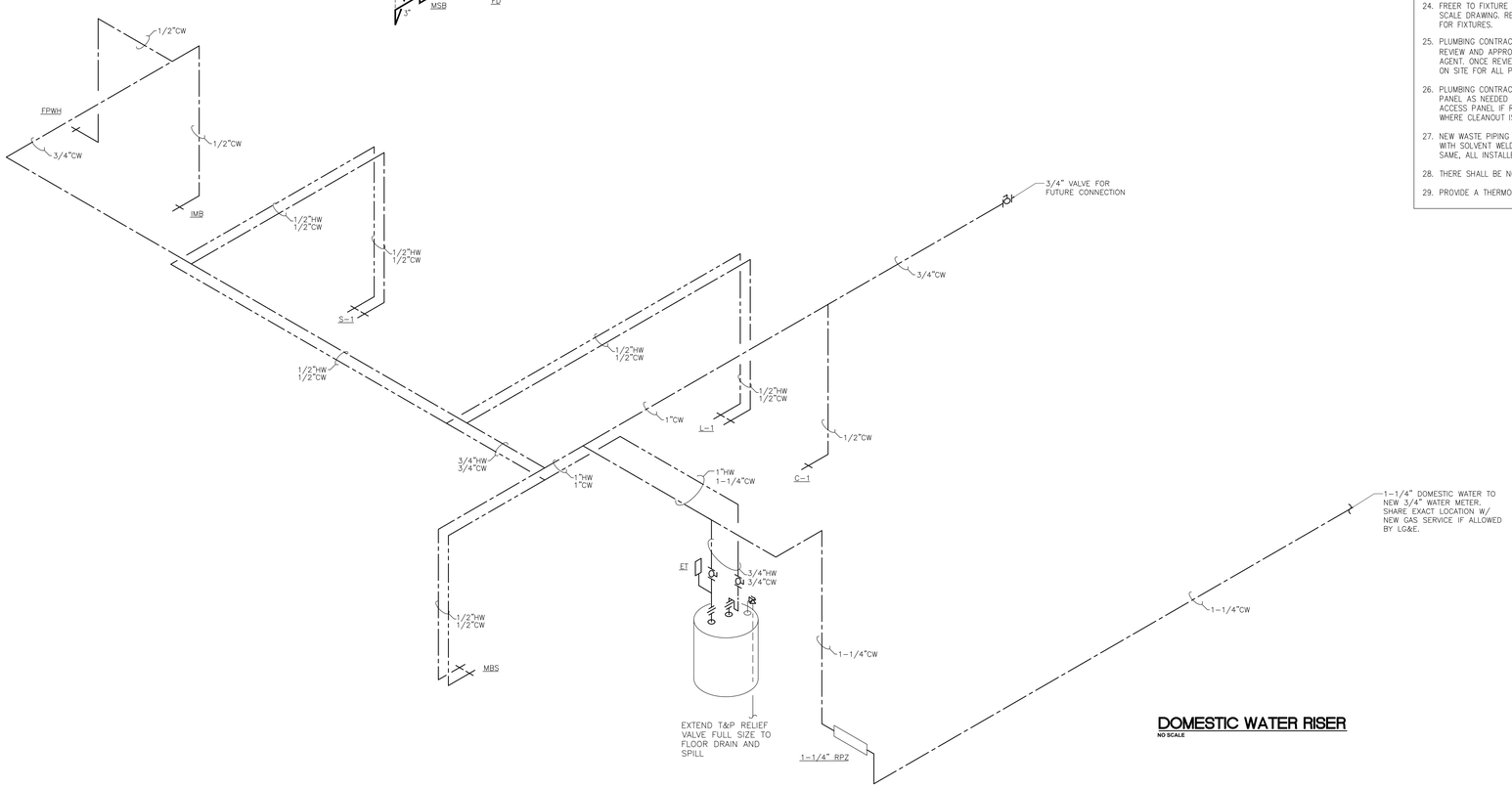

DOMESTIC WATER RISER

NO SCALE

PLUMBING FIXTURES:

THE FOLLOWING ITEMS AND/OR FIXTURES SHALL BE PROVIDED AND INSTALLED BY THE PLUMBING CONTRACTOR, STANDARD CHROME FINISH SHALL BE THE NORM FOR EXPOSED METAL PARTS.

C-1	ADA HEIGHT –FLOOR SET– PRESSURE ASSISTED – TANK TYPE – WHITE TOILET –WHITE OPEN FRONT SEAT LESS COVER – WAX RING SEAL – BRASS CLOSET BOLTS, NUTS AND WASHERS SET – CHROME ANGLE COMPRESSION STOP AND ESCUTCHEON – BRAIDED STAINLESS SUPPLY. PROVIDE TANK LEVER ON "WIDE SIDE" OF ADA SPACE.
L-1	KOHLER K-2000 20.25"X16" WHITE CHINA UNDERMOUNT ADA LAVATORY –AMERICAN STANDARD COLONY PRO SINGLE CONTROL LAVATORY FAUCET – GRID DRAIN – CHROME P TRAP WITH CLEANOUT – CHROME ANGLE STOPS AND ESCUTCHEONS – TEMPERING VALVE AS REQUIRED BY CODE
CO	SMITH OR ZURN 3" OR 4" GASKETED INLET ADJUSTABLE NICKEL BRONZE TOP CLEANOUT.
TWCO	SAME AS CLEANOUT, ON TWO WAY FITTING IN MAIN
FD	3" OR 4" ZURN 415 B FLOOR DRAIN WITH GASKETED INLET AND NICKEL BRONZE ADJUSTABLE TOP AND TRAP PRIMER OPENING.
TP	PRIME RITE OR EQUAL TRAP PRIMER VALVE – PROVIDE RATED LOCKING ACCESS PANEL AS MAY BE REQUIRED FOR VALVE MAINTENANCE
HWH	20 GAL. ELECTRIC HOT WATER HEATER– 2500 WATT ELEMENT – ORDER FOR VOLTAGE AVAILABLE ON SITE – WATER HEATER PAN – – WATER HEATER WITH DRAIN TO FLOOR DRAIN – THERMAL EXPANSION TANK – RELIEF VALVE WITH CODE APPROVED DISCHARGE
MSB	FIAT OR MUSTEE 3" DRAIN MOP BASIN WITH ROUGH CHROME WALL FAUCET WITH INTEGRAL STOPS AND CHECKS AND APPROVED VACUUM BARKER. WALL PROTECTION PANELS IF REQUIRED ARE TO BE BY OTHERS.
S-1	25"x22"6" OR 25"x22"6.5 ADA STAINLESS STEEL UNDERCOUNTER MOUNT SINK – BASKET STRAINER – AMERICAN STANDARD COLONY PRO SINGLE CONTROL KITCHEN FACET – CHROME P TRAP WITH CLAENOUT – BRAIDED SUPPLIES – CHROME STOPS AND ESCUTCHEON. PROVIDE CODE.
ACC PANEL	FURNISH AND INSTALL WHERE REQUIRED, STAINLESS S STEEL LOCKING ACCESS PANEL RATED FOR WALL OF INSTALLATION, SIZED AS MAY BE NEEDED.
HB	CHROME LOOSE KEY WALL FLANGED CHROME HOSE BIBB WITH VACUUM BREAKER
RPZ	1-¼" RPZ WITH STRAINER, AIR GAP AND DRAIN FITTINGS , CERTIFIED AND TESTED PER GOVERNING AUTHORITIES REQUIREMENTS.
FHHB	WOODWARD #25 P RUSTPROOF SILL COCK WITH INTEGRAL VACUUM BREAKER , SECURE TO PREVENT MOVEMENT AND MAINTAIN POSITIVE DRAINAGE TO PREVENT FREEZING. PROVIDE VALVE IN CABINET OF BREAK ROOM KITCHEN. ORDER FOR PROPER LENGTH OF WALL WHERE INSTALLED.

PLUMBING NOTES:

1. SCOPE OF THE PLUMBING OR THE PROJECT IS RENOVATION OF A GUTTED BANK BUILDING FOR A NEW BANK BRANCH OFFICES AND PROPOSED TENANT LEASE SPACE. PIPING AND FLOORING AND EQUIPMENT ON INTERIOR SHALL BE REMOVED AND DISPOSED BY OTHERS.
2. PLUMBING SHALL INCLUDE A 1" VALVE WATER LINE AND A 4" SANITARY WASTE OPENING IN THE PROPOSED TENANT SPACE, WITH A 4" PLUMBING VENT OPENING FOR TENANT SPACE. PLUMBING DESIGN AND SUBMITTAL FOR NEW TENANT PLUMBING SHALL BE PROVIDED AS LEASE MAY BE GENERATED. THIS IS NOT A PART OF THIS SCOPE IN THE PROJECT.
3. ALL PLUMBING WORK SHALL CONFORM TO ALL CODES, RULES AND REGULATION IN PLACE AT TIME OF CONSTRUCTION.
4. ALL PLUMBING WORK SHALL BE INSTALLED BY LICENSED PROFESSIONALS, PERMITTED AND INSPECTED BY OFFICIALS HAVING JURISDICTION OF THE PROJECT. THERE MAY BE THE REQUIREMENT FOR ALL CONTRACTORS TO BE REGISTERED AND LICENSED FOR THE PROJECT.
5. ROOF PENETRATIONS SHALL BE FLASHED AND COORDINATED TO BE WATERTIGHT, WITH THE ROOFING CONTRACTOR. FLASHING AS MAY BE REQUIRED SHALL BE PROVIDED BY RESPECTIVE CONTRACTOR REQUIRING SERVICE AND INSTALLATION OF SAME. THERE SHALL BE NO ROOF PENETRATIONS THAT WOULD VOID OWNER'S WARRANTY. BEAR IN MIND THERE IS AN A ORIGINAL ROOF AND ANOTHER ROOF ON WOOD CONSTRUCTION OVER THAT.
6. WATER DISTRIBUTION PIPING ABOVE AND BELOW GRADE SHALL BE PEX OR EQUAL FLEXIBLE TUBING, WITH FITTINGS AND VALVES TO MATCH.ADHERE TO ALL APPROVED INSTALLATION METHODS AND CODES. MAXIMUM 3 FT BRANCH OF 1/2" PIPING TO A FIXTURE. IF LONGER INCREASE ON PIPE SIZE.
7. PIPING SHALL BE INSULATED WITH ¼" WALL FLEXIBLE PIPE INSULATION, INSTALL AS RECOMMENDED BY MANUFACTURER. ADHERE TO CODES AS TO REQUIRED FLAME SPREAD OF PIPE INSULATION.
8. INSTALL HANGERS AND SUPPORTS COMPATIBLE WITH MATERIALS BEING SUPPORTED, INSTALL PER MANUFACTURER'S DIRECTIONS AND CODES.
9. INSTALL STUD GUARDS AS MAY BE REQUIRED BY CODE.
10. THERE SHALL BE NO DRILLING OF SUPPORT STRUCTURE MEMBERS, WITHOUT WRITTEN PERMISSION FROM ARCHITECT.
11. ALL PENETRATIONS SHALL BE PROPERLY FIRE AND SMOKE CAULKED. ANY PENETRATION THROUGH AN EXISTING RATED STRUCTURE SHALL BE RETURNED TO ORIGINAL PROTECTIVE RATING UPON COMPLETION.
12. ALL PLUMBING MATERIALS SHALL BE OF NEW AND BEST QUALITY.
13. ALL PIPING SYSTEMS SHALL BE TESTED AND INSPECTED PRIOR TO COVERING OF SAME, ALL PER CODES. IN THE EVENT THE TESTING PROCEDURE SHOULD FIND A LEAK OR DEFICIENCY, REMOVE AND REPAIR PIPING AND RETEST UNTIL SOUND AND LEAK FREE.
14. EQUIPMENT AND FITTINGS OR GAUGES FOR THESE TEST SHALL BE PROVIDED BY PLUMBING CONTRACTOR.
15. ALL NE WATER PIPING SYSTEMS SHALL BE SANITIZED WITH A CHLORINE SOLID TION PER CODE. ENSURE FLUSHING OF PIPING OF ALL SANITIZING MATERIALS, PRIOR TO COMMISSIONING TO USE.
16. PRIOR TO CONNECTION TO ANY SYSTEM, PLUMBING CONTRACTOR SHALL VERIFY INVERT, AND ADEQUATE OPERATING PRESSURES OF ANY EXISTING UTILITY SYSTEMS.
17. PROVIDE PROPER SLOPE FOR ALL NEW SANITARY PIPING SYSTEMS.
18. IF THERE IS FOUND TO BE THE NEED AFTER INVESTIGATION, PLUMBING CONTRACTOR SHALL PROVIDE ALTERNATE PRICING FOR FLUSHING OR POWER JETTING EXISTING SANITARY SEWER, PRIOR TO CONNECTION TO SAME.
19. MAINTAIN NOTES ON A SET OF DOCUMENTS ON SITE THAT WILL BECOME "RECORD DRAWINGS" OF ANY CHANGE OR DISCREPANCY IN PLUMBING DOCUMENTS THAT MAY BE ENCOUNTERED.
20. ALL PIPING SHALL BE INSTALLED IN A NEAT AND WORKMAN LIKE MANNER. CONCEALED WHERE POSSIBLE. CHASES OR SOFFITS TO BE PROVIDED BY GENERAL CONTRACTOR AS MAY BE REQUIRED.
21. PROJECT IS LOCATED IN A VISIBLE PUBLIC AREA, THUS CONTRACTORS EMPLOYEES SHOULD CONDUCT THEMSELVES ACCORDINGLY. CONFINE YOUR ACTIONS TO THE AREA OF CONSTRUCTION.
22. ALL FIXTURES FOR THE PLUMBING SYSTEM SHALL BE FITTED WITH, PROVIDED BY PLUMBING CONTRACTOR, STOPS, BRAIDED SUPPLIES, 17 GAUGE CHROME P TRAPS WITH CLEANOUT, TEMPERING VALVES, AS MAY BE REQUIRED FOR A COMPLETE AND OPERABLE PLUMBING SYSTEM.
23. PROPER FIXTURE SUPPORT OR BLOCKING IN WALLS FOR HANGERS SHALL BE PROVIDED BY GENERAL CONTRACTOR WITH PLUMBERS DIRECTIONS AS TO MEASUREMENTS FOR SAME.
24. FREER TO FIXTURE CATALOG DATA FOR ROUGH IN MEASUREMENTS. DO NOT SCALE DRAWING. REFER TO DIMENSIONED DRAWINGS FOR ALLOCATED SPACE FOR FIXTURES.
25. PLUMBING CONTRACTOR SHALL PROVIDE ELECTRONICS FIXTURE SUBMITTALS FOR REVIEW AND APPROVALS. FIXTURE SELECTIONS SHALL BE BY OWNER/OWNER'S AGENT. ONCE REVIEWED AND APPROVED, THERE SHALL BE A SET PROVIDED ON SITE FOR ALL PARTIES USE.
26. PLUMBING CONTRACTOR SHALL PROVIDE A 4" CLEANOUT TO GRADE OR ACCESS PANEL AS NEEDED ATY POINTS OF CONNECTION TO EXISTING WASTE OR VENTS. ACCESS PANEL IF REQUIRED SHALL COMPLY WITH RATING OF STRUCTURE WHERE CLEANOUT IS INSTALLED.
27. NEW WASTE PIPING BELOW GRADE SHALL BE SCHEDULE 40 DWV PER CODE. WITH SOLVENT WELD FITTINGS. ABOVE GRADE WASTE AND VENT SHALL BE THE SAME, ALL INSTALLED PER ALL REGULATIONS AND CODES.
28. THERE SHALL BE NO NON-METALLIC PIPING IN PLENUM RATED SPACES.
29. PROVIDE A THERMOMETER ON OUTLET OF HOT WATER AT WATER HEATER.
30. THERE SHALL BE A NEW ¾" DOMESTIC WATER METER INSTALLED, WITH A NEW 1-¼" RPZ AND DOMESTIC WATER SERVICE TO THE BUILDING. THERMAL EXPANSION TANK ON WATER J HEATER PER CODE. RPZ SHALL HAVE ADEQUATE SIZE DRAIN TO BE SAFE WASTED. RPZ SHALL BE TESTED, CERTIFIED WITH PAPER WORK AS REQUIRED SUPPLIED TO GOVERNING AGENCIES AS REQUIRED.
31. PLUMBING CONTRACTOR SHALL PROVIDE AN "ADD ALTERNATE", FOR INSTALLATION OF THE NEW ¾" WATER METER AND ALL RELATED FEES FROM LOUISVILLE WATER CO.
32. PLUMBING CONTRACTOR SHALL MAINTAIN A SET OF DRAWINGS ON SITE WITH NOTATIONS OF PLUMBING CHANGES AS THEY OCCUR. THIS IS IN ORDER TO PROVIDE AT THE END OF THE PROJECT "RECORD DRAWINGS" TO BE TURNED OVER TO OWNER FOR FUTURE REFERENCE. THESE MAY BE ELECTRONIC OR HARD COPY.
33. ANY CHANGES IN ORIGINAL CONTRACT DHAL BE AGREED UPON IN WRITING PRIOR TO PERFORMANCES OF SAME.COMPENSATION SHALL NOT BE PROVIDED FOR WORK PERFORMED WITH OUT AUTHORIZATION.
34. FLOOR DRAINS, HUB DRAIN AND OPEN RECEPTACLES SHALL BE FITTED WITH A TRAP PRIME PER CODE. PROVIDE PAIN TABLE LOCKING ACCESS PANEL FOR MAINTENANCE OF THE VALVE.
35. UPON COMPLETION OF THE PROJECT PROVIDE 1" BRASS TAG ON A BEADED CHAIN ON ALL VALVES IN WATER SYSTEM. PROVIDE OWNER WITH A VALVE CHART AS TO LOCATIONS.
36. CONNECTION OF OWNER SUPPLIED APPLIANCES SHALL NOT BE APT OF PLUMBING SCOPE. ELECTRICAL CONNECTION AND POWER TO PLUMBING EQUIP ALIMENT SHALL BE CODE APPROVED CONNECTION BY LICENSED INDIVIDUAL.
37. PLUMBING CONTRACTOR SHALL LAYOUT AND COORDINATE, SCRIBE CUT, CORE DRILL, BREAK AND REMOVE CONCRETE OR PAVEMENT AS MAY BE REQUIRED FOR THE PLUMBING.
38. BACKFILL OF EXCAVATION SHALL BE TO SUB GRADE WITH CLEAN SHARP GRILLAGE, TO ALLOW FOR RESTORATION OF SURFACES BY OTHERS. DO NOT BACKFILL TRENCHES WITH FROZEN MATERIALS. MECHANICALLY TAMP AS MAY BE NECESSARY FOR PREVENTION OF SETTLEMENT. SIX INCHES OF STONE BENEATH ALL PIPING IN TRENCHES.
39. DO NOT SCALE DRAWINGS FOR ROUGH INS. REFER TO DIMENSIONED DOCUMENTS FOR SAME.
40. PLUMBING DRAWINGS ARE DIAGRAMMATIC IN NATURE. PROVIDE ALL OFFSETS AND BENDS TO PROVIDE A COMPLETE AND OPERABLE PLUMBING SYSTEM.
41. EXERCISE CAUTION TO PREVENT THE INSTALLATION OF WASTE OR WATER PIPING OVER HEAD OF ANY ELECTRICAL IF POSSIBLE.
42. NO PIPING SHALL BE INSTALLED WHERE THERE IS A POSSIBILITY OF FREEZING.
43. PLUMBING CONTRACTOR SHALL PROVIDE TO CASE WORK CONTRACTOR, FIXTURES TO BE MOUNTED OR SEALED O IN COUNTERTOP OPENINGS.
44. WASTE, VENT AND WATER PIPING SHALL BE PROVIDE WITH PROPER SLOPE AS CODE MAY REQUIRE.
45. IN THE VENT THERE MAY BE ROCK ENCOUNTERED, CONSULT WITH GENERAL CONTRACTOR AS TO PROCESS FOR REMOVAL AND DISPOSAL.
46. PLUMBING CONTRACTOR SHALL VISIT SITE TO VIEW EXISTING CONDITIONS OF THE PROJECT.
47. CONDENSATE PIPING FOR HVAC SHALL BE BY OTHERS AND PLUMBER SHALL MAKE WASTE OPENINGS AVAILABLE FOR SAME.
48. COORDINATE ANY LG&E NATURAL GAS ALTERATIONS OR ADDITIONS ON THE PROJECT. THERE IS A MORATORIUM ON THE ADDITIONAL OF ANY GAS TO A PROJECT, AND ALL NATURAL GAS IS SUBJECT TO L G & E APPROVALS. LOAD SLIP OF PROPOSED
49. GAS USAGE HAS BEEN PROVIDED TO MR. JASON OWENS, GAS LOCATOR FOR REVIEW AND ACTIONS.
50. IN THE EVENT THERE IS A NEW GAS SERVICE AND METER ALLOWED AT THE BUILDING, PROVIDE REQUIRED ITEMS FOR SAME FOR LG&E TO INSTALL NEW SERVICE. USE THE TRENCH AS MUCH AS POSSIBLE TO ALLOW FOR INSTALLATION OF THE NEW 1 ¼" DOMESTIC WATER SERVICE.
51. SPOILS FOR PROJECT EXCAVATION SHALL BE PLACED IN DUMPSTER PROVIDED FOR THAT PURPOSE ON SITE.
52. ANY NATURAL GAS SIPPING ON SITE SHALL MEET LG&E INSPECTIONS AND TESTING REGULATIONS. PIPING SHALL BE SCHEDULE 40 BLACK WITH 150 # BLACK MALLEABLE FITTINGS AND AGA APPROVED GAS VALVES. IF THE INSTALLING PLUMBING CONTRACTOR HOLD CERTIFICATION, MEGA-PRESS FITTINGS MAY BE USED FOR THE GAS HOUSE LINE, INSTALLED PER MANUFACTURER'S INSTRUCTIONS.
53. THERE SHALL BE NO UNIONS IN ANY SYSTEM INSTALLED IN A CONCEALED NATURE.
54. ALL GAS APPLIANCES SHALL HAVE A LINE SIZE 4" LONG BLACK NIPPLE AND CAP AS A DRIP LEG.
55. INSTALL GAS VALVES AT ALL EQUIPMENT CONNECTIONS.
56. CLEANOUT OR TEST TEES SHALL BE INSTALLED AL POINTS OF CONNECTION TO EXISTING SYSTEMS, IF THAT OCCURS.
57. ALL PIPING SYSTEMS SHALL BE TESTED AN PROVEN SOUND AND LEAK-FREE PRIOR TO CONCEALMENT OR COVERING OF SAME.
58. ANY DISRUPTION OR PENETRATION OF FIRE RATED AREA SHALL BE RESTORED TO ORIGINAL RATING UPON COMPLETION.
59. PLUMBING PLANS, COPIES, SUBMITTAL AND ANY RELATED FEES FOR PLUMBING APPROVAL BY THE GOVERNING AGENCIES SHALL BE PAID FOR AND PROVIDED BY OTHERS.

TowerPinkster
ARCHITECTURE · ENGINEERING · INTERIORS
TOWERPINKSTER.COM

STATE OF KENTUCKY
ERNEST CRUSE, II
17848
LICENSED
PROFESSIONAL ENGINEER

ISSUED FOR	DATE

PROJECT TITLE
BUCKMAN ST. BRANCH - 2025 RENOVATIONS

OWNER
FIRST HARRISON BANK

130 S. BUCKMAN ST.
SHEPHERDSVILLE, KY
40165

SHEET TITLE
PLUMBING - NOTES AND RISERS

DATE
APRIL 30, 2025

SHEET NUMBER
P 001

1 PLUMBING PLAN - WASTE AND VENT
1/4" = 1'-0"

SHEET TITLE
PLUMBING PLAN - WASTE AND VENT PLAN

SHEET NUMBER
P 101

DATE
APRIL 30, 2025

OWNER
FIRST HARRISON BANK

130 S. BUCKMAN ST.
SHEPHERDSVILLE, KY
40165

PROJECT TITLE
BUCKMAN ST. BRANCH -
2025 RENOVATIONS

ISSUED FOR

DATE

STATE OF KENTUCKY
ERNEST CRUSE II
17848
LICENSED
PROFESSIONAL ENGINEER

TowerPinkster
ARCHITECTURE • ENGINEERING • INTERIORS
TOWERPINKSTER.COM

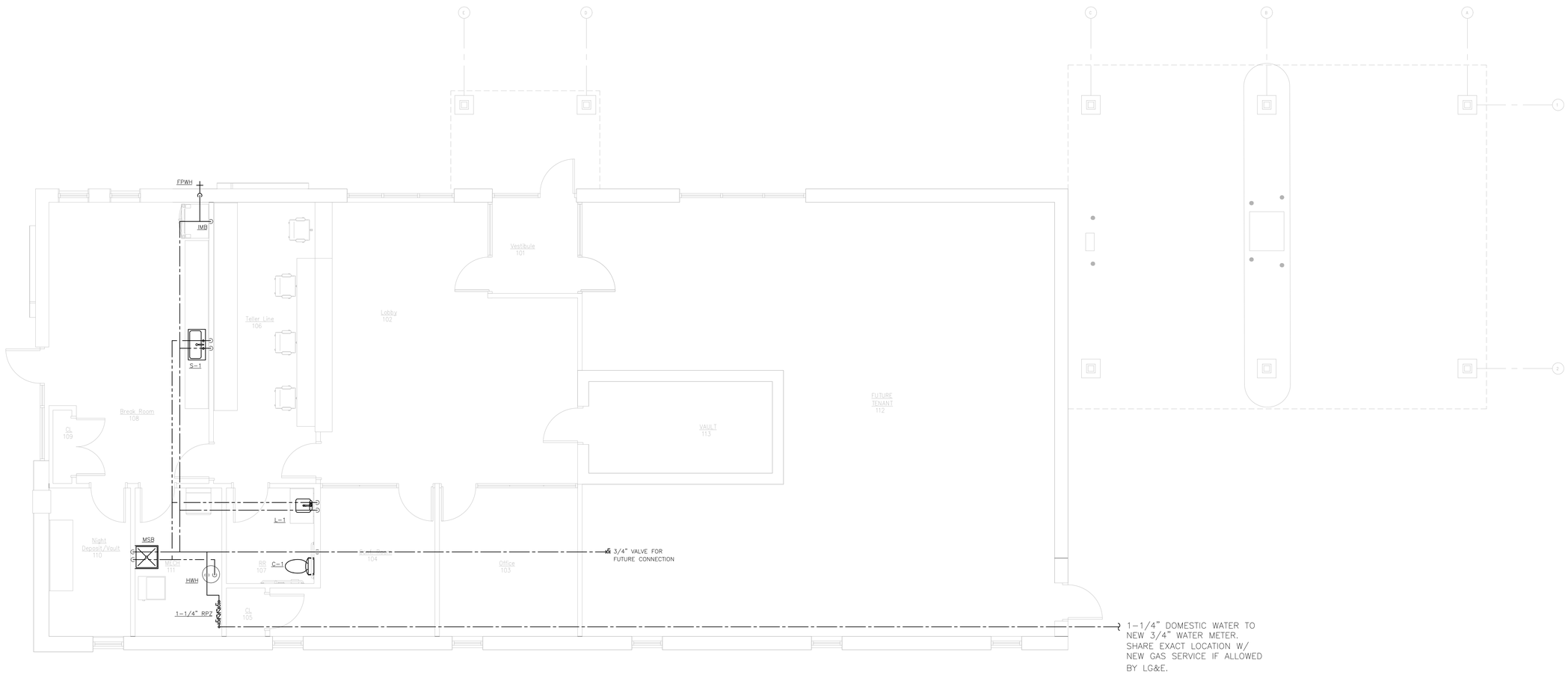

1 PLUMBING PLAN - DOMESTIC WATER
1/4" = 1'-0"

TowerPinkster
ARCHITECTURE · ENGINEERING · INTERIORS
TOWERPINKSTER.COM

STATE OF KENTUCKY
ERNEST CRUSE, II
17848
LICENSED
PROFESSIONAL ENGINEER

ISSUED FOR	DATE

PROJECT TITLE
BUCKMAN ST. BRANCH - 2025 RENOVATIONS

OWNER
FIRST HARRISON BANK

130 S. BUCKMAN ST.
SHEPHERDSVILLE, KY
40165

SHEET TITLE
PLUMBING PLAN - DOMESTIC WATER PLAN

DATE
APRIL 30, 2025

SHEET NUMBER
P 102

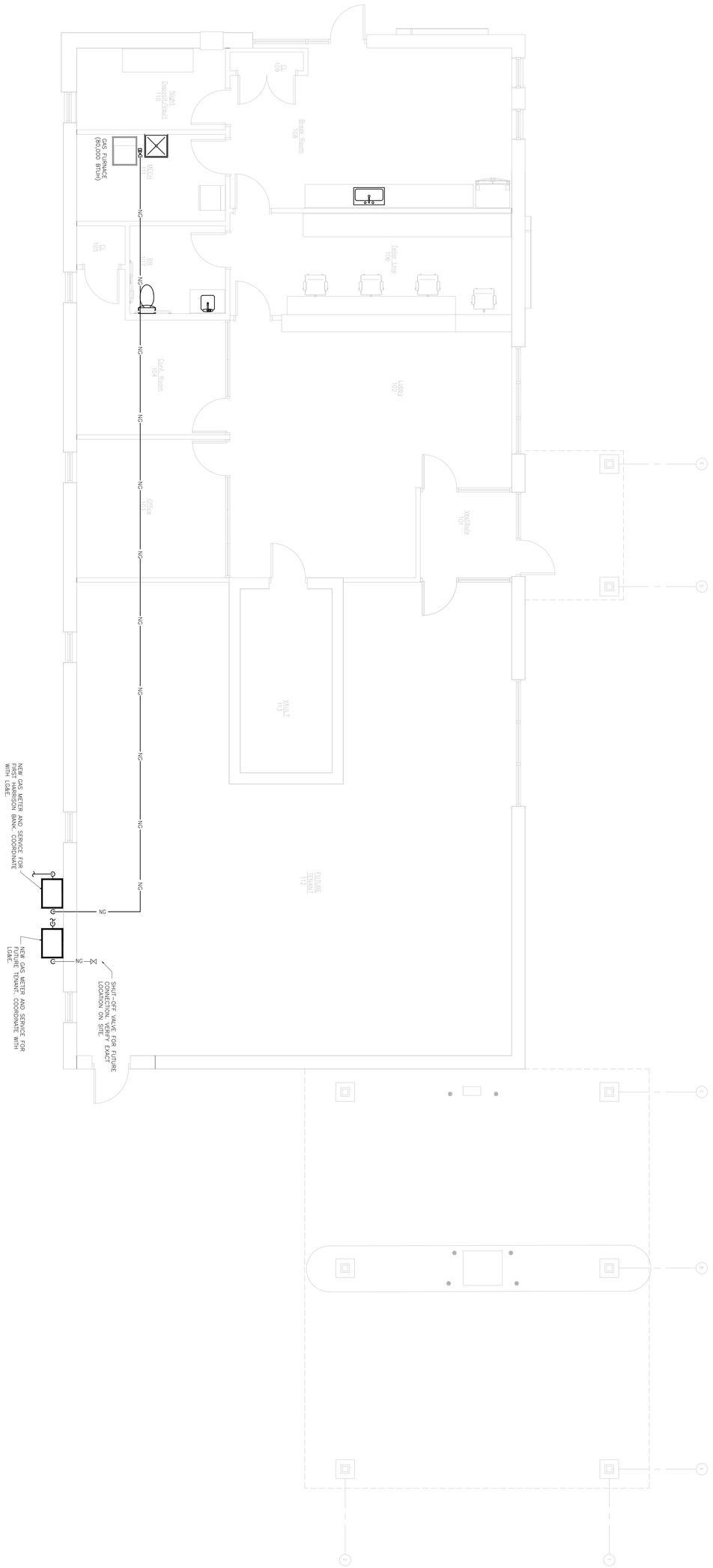

1 PLUMBING PLAN - NATURAL GAS PLAN
1/4" = 1'-0"

SHEET TITLE
PLUMBING PLAN - NATURAL GAS PLAN

SHEET NUMBER
P 103

DATE
APRIL 30, 2025

OWNER
FIRST HARRISON BANK

130 S. BUCKMAN ST.
SHEPHERDSVILLE, KY
40165

PROJECT TITLE
BUCKMAN ST. BRANCH -
2025 RENOVATIONS

ISSUED FOR

DATE

STATE OF KENTUCKY
ERNEST R. CRUSE II
17248
LICENSED PROFESSIONAL ENGINEER

TowerPinkster
ARCHITECTURE • ENGINEERING • INTERIORS
TOWERPINKSTER.COM

GENERAL NOTES:

A. REFER TO SPECIFICATIONS AND THE CONTRACT DOCUMENTS FOR ADDITIONAL INFORMATION AND REQUIREMENTS.

B. ALL MECHANICAL WORK SHALL BE PERFORMED BY A LICENSED MECHANICAL CONTRACTOR.

C. ALL WORK SHALL BE COORDINATED AND SCHEDULED WITH THE CONSTRUCTION MANAGER (CM) OR GENERAL CONTRACTOR (GC), OTHER TRADES, THE OWNER, AND RELATED UTILITY COMPANIES. ALL WORK SHALL COINCIDE WITH THE CONSTRUCTION PHASING PER THE CONTRACT DOCUMENTS OR CONSTRUCTION DOCUMENTS AND/OR AS MODIFIED BY THE CM/GC AND APPROVED BY THE OWNER AND DESIGN TEAM. THE MECHANICAL CONTRACTOR SHALL COORDINATE AND DEVELOP A PHASING PLAN WHERE ONE IS NOT EXPLICITLY SHOWN AND SHALL ENSURE THAT SAID PHASING PLAN IS APPROVED PRIOR TO PROCEEDING WITH WORK. ANY AND ALL DEMOLITION SHALL NOT PERMIT INTERRUPTION OF SERVICE IN AN OCCUPIED BUILDING UNLESS COORDINATED AND APPROVED.

D. ALL DRAWINGS ARE DIAGRAMMATIC AND INDICATE THE GENERAL ARRANGEMENTS OR GEOMETRICAL RELATIONSHIPS OF DUCTWORK, PIPING, EQUIPMENT, AND SERVICES. THEY ARE NOT INTENDED TO SPECIFY OR SHOW EVERY OFFSET, SEQUENCE, DEVICE, OPTION, FITTING, VALVE, OR COMPONENT. CONTRACTOR TO PROVIDE ANY ADDITIONAL DUCT OR PIPING OFFSETS AND/OR FITTINGS, INCLUDING DIVIDED DUCTS AND FLATTENED DUCTS, REQUIRED FOR PROPER INSTALLATION AND TO MAINTAIN CLEARANCES AS ENCOUNTERED IN THE FIELD.

E. THE MECHANICAL CONTRACTOR SHALL OBTAIN A COPY OF THE ENTIRE SET OF CONTRACT DOCUMENTS PRIOR TO BID AND SHALL COORDINATE ROUTING AND INSTALLATION OF MECHANICAL DUCTWORK, PIPING, AND EQUIPMENT WITH ALL OTHER DISCIPLINES AND TRADES INCLUDING BUT NOT LIMITED TO CIVIL, ARCHITECTURAL, STRUCTURAL, FIRE SUPPRESSION, PLUMBING, AND ELECTRICAL.

F. REFER TO THE ENTIRE SET OF CONTRACT DOCUMENTS FOR DETAILS OF CONSTRUCTION AND INSTALLATION REQUIREMENTS. FURNISH ALL LABOR, MATERIAL, AND EQUIPMENT REQUIRED FOR COMPLETION AND OPERATION OF A FULLY FUNCTIONAL MECHANICAL SYSTEM AND IN ACCORDANCE WITH ALL APPLICABLE CODES AND STANDARDS INCLUDING BUT NOT LIMITED TO BUILDING CODE, ASHRAE, IMC, IECC, SMACNA, AND NFPA.

G. THE EXACT LOCATIONS OF ALL EQUIPMENT, DUCTS, DIFFUSERS, ETC. SHALL BE COORDINATED WITH ALL OTHER TRADES. CEILING MOUNTED LIGHTING AND ELECTRICAL REQUIREMENTS TAKE PRECEDENCE OVER CEILING MOUNTED MECHANICAL EQUIPMENT. SEE ARCHITECTURAL REFLECTED CEILING PLANS FOR CEILING GRID AND LIGHTING LAYOUT FOR COORDINATION OF FINAL DIFFUSER LOCATIONS.

H. THE MECHANICAL DRAWINGS REFLECT A "BASIS OF DESIGN" HVAC SYSTEM THAT HAS BEEN DESIGNED AROUND SPECIFIC PRODUCTS/MANUFACTURER'S (SEE SCHEDULES). THE SELECTION OF A "BASIS OF DESIGN" HAS INFLUENCED THE DESIGNS OF OTHER TRADES (ELECTRICAL, STRUCTURAL, ETC.). THE CONTRACTOR MAY USE "NON-BASIS OF DESIGN" PRODUCTS/MANUFACTURER'S AS PERMITTED BY THE SPECIFICATIONS AND/OR CONTRACT DOCUMENTS. COORDINATION OF ALL MODIFICATIONS TO EACH DISCIPLINE WHICH RESULT FROM THE USE OF "NON-BASIS OF DESIGN" EQUIPMENT OR MATERIALS SHALL BE THE RESPONSIBILITY OF THE MECHANICAL CONTRACTOR. IF "NON-BASIS OF DESIGN" MANUFACTURERS, SIZES, OR MODEL NUMBERS ARE BID, SUBMITTED, OR INSTALLED; IT IS THE RESPONSIBILITY OF THE MECHANICAL CONTRACTOR AND ALL OF HIS OR HER SUBCONTRACTORS TO COORDINATE ALL DIFFERENCES PRIOR TO BID. ALL COSTS OF ALL TRADES ASSOCIATED WITH THE USE OF "NON-BASIS OF DESIGN" EQUIPMENT SHALL BE THE RESPONSIBILITY OF THE MECHANICAL CONTRACTOR AND SHALL BE INCLUDED IN THE BID. SUBSEQUENTLY, ANY ADDITIONAL COST BORE BY THE ENGINEER (MECHANICAL, ELECTRICAL, ETC) TO ACCOMMODATE "NON-BASIS OF DESIGN" EQUIPMENT SHALL BE BORE BY THE CONTRACTOR AND PAID TO THE ENGINEER OF RECORD DURING SUBMITTALS.

I. NON-BASIS OF DESIGN EQUIPMENT OR MATERIALS AS ALLOWED BY THE SPECIFICATIONS AND/OR CONTRACT DOCUMENTS, WHICH ARE INSTALLED AND SUBSEQUENTLY VIEWED UNSATISFACTORY BY THE OWNER AND/OR ENGINEER WITHIN THE WARRANTY PERIOD, SHALL BE REMOVED COMPLETELY BY THE CONTRACTOR AND REPLACED WITH THE ORIGINAL DESIGN OR CORRECTED AS DIRECTED BY THE ENGINEER WITHOUT ADDITIONAL COST TO THE OWNER.

J. CONTRACTOR SHALL VISIT THE JOB SITE, FIELD VERIFY FIT, COORDINATE WITH OTHER TRADES, AND BECOME FAMILIAR WITH ALL PROJECT CONDITIONS PRIOR TO FABRICATING DUCTWORK, INSTALLING EQUIPMENT, ETC. NO ALLOWANCES WILL BE MADE FOR LACK THEREOF.

K. THE CONTRACTOR SHALL BE RESPONSIBLE FOR COORDINATION AND COSTS FOR ALL PERMITS, TESTING, AND INSPECTIONS.

L. THE ENTIRE MECHANICAL INSTALLATION SHALL BE AS REQUIRED TO MAINTAIN FIRE/SMOKE RATINGS AND/OR "UL" ASSEMBLY RATINGS AS REQUIRED BY THE CONTRACT DOCUMENTS AND AS SHOWN ON THE ARCHITECTURAL. SEAL AROUND ALL PENETRATIONS THROUGH ALL FIRE/SMOKE SEPARATIONS AND/OR "UL" RATED ASSEMBLIES. COORDINATE ALL PENETRATIONS WITH THE CONSTRUCTION MANAGER AND/OR GENERAL CONTRACTOR. PROVIDE ADDITIONAL FIRE DAMPERS, SMOKE DETECTORS, AND SMOKE DAMPERS (INCLUSIVE OF WIRING) AS REQUIRED FOR A FULLY FUNCTIONAL AND CODE COMPLIANT SYSTEM.

M. ALL DUCTWORK, PIPING, AND MECHANICAL EQUIPMENT SHALL BE SUPPORTED DIRECTLY FROM THE STRUCTURE. NO OTHER TRADES, I.E. ELECTRICAL, CEILING, PLUMBING, ETC., SHALL BE SUSPENDED, HUNG, OR SUPPORTED FROM MECHANICAL DUCTWORK OR MECHANICAL PIPING.

N. ALL BUILDING PENETRATIONS MUST BE COORDINATED WITH THE ARCHITECT AND SHALL BE FLASHED AND SEALED WEATHER-TIGHT. ALL MATERIALS AND COLORS MUST BE PRE-APPROVED BY THE ARCHITECT. NEW OPENINGS AND/OR PENETRATIONS FOR MECHANICAL ITEMS SHALL BE CUT, SLEEVED, ETC. BY THE MECHANICAL CONTRACTOR. ALL OPENINGS SHALL BE CORE DRILLED OR SAW-CUT. NO "HAMMER DRILLING" WILL BE ALLOWED.

O. ROUTE DUCTWORK AS HIGH AS POSSIBLE TO FACILITATE ACCESS TO ABOVE CEILING SPACE. COORDINATE ROUTING WITH OTHER SERVICES AND TRADES. PROVIDE ADDITIONAL DUCTWORK, OFFSETS, ETC. TO ACCOMMODATE FIELD CONDITIONS AS REQUIRED FOR A COMPLETE AND FUNCTIONING SYSTEM AT NO ADDITIONAL COST. ADDITIONAL OFFSETS REQUIRE APPROVAL FROM THE ENGINEER. ROUTE DUCTWORK BETWEEN JOISTS WHERE POSSIBLE.

P. ALL AIR DEVICES LOCATED ABOVE GYPBOARD OR HARD CEILINGS SHALL HAVE ACCESSIBLE BALANCING DAMPERS.

Q. ALL DUCTWORK SHALL BE CONSTRUCTED AND INSTALLED PER SMACNA HVAC DUCT CONSTRUCTION STANDARDS.

R. PROVIDE AND INSTALL DUCT ACCESS DOORS FOR INSPECTION OF ALL INSTALLED FIRE DAMPERS AS DIRECTED BY SMACNA HVAC CONSTRUCTION STANDARDS.

S. MAXIMUM FLEXIBLE DUCT LENGTH SHALL BE 5'-0". ALL FLEXIBLE DUCT SHALL CONFORM TO THE REQUIREMENTS OF UL 181 FLEXIBLE AIR DUCTS. SUPPORT TO ELIMINATE SAGGING AND KINKING. INSULATED FLEXIBLE DUCTS SHALL MEET MINIMUM R-VALUES REQUIRED BY THE IECC.

T. ALL HVAC EQUIPMENT TO BE INSTALLED PER MANUFACTURER'S REQUIREMENTS. UTILIZE FACTORY FILTERS DURING CONSTRUCTION.

U. THE MECHANICAL CONTRACTOR SHALL BALANCE SYSTEM TO AIR QUANTITIES INDICATED ON PLANS AND PROVIDE OWNERS REPRESENTATIVES WITH COMPLETE NEBB/AABC BALANCE REPORT. THE MECHANICAL CONTRACTOR SHALL PROVIDE AS MANY ADDITIONAL SITE VISITS BY THE LICENSED TAB CONTRACTOR AS REQUIRED BY THE ENGINEER FOR A COMPLETE AND FUNCTIONING AND APPROVED SYSTEM IN COMPLIANCE WITH THE CONTRACT DOCUMENTS.

V. PROVIDE A MANUAL VOLUME DAMPER AT ALL BRANCH TAKE-OFFS ON SUPPLY AND RETURN. COORDINATE ADDITIONAL MANUAL VOLUME DAMPER LOCATIONS REQUIRED FOR A FULLY FUNCTIONAL SYSTEM WITH THE ENGINEER PRIOR TO ORDER, FABRICATION, OR INSTALLATION.

W. ALL DUCT DIMENSIONS SHOWN ARE INTERIOR "CLEAR" DUCT DIMENSIONS.

X. MAINTAIN 10'-0" MINIMUM CLEARANCE BETWEEN OUTDOOR AIR INTAKES AND EXHAUST, PLUMBING VENTS, ETC. AND/OR AS REQUIRED BY THE BUILDING CODE, WHICHEVER IS MORE STRINGENT.

Y. MAINTAIN 10'-0" MINIMUM CLEARANCE FROM EDGE OF ROOFTOP EQUIPMENT TO ROOF EDGE UNLESS RAILING OR PARAPET OF SUFFICIENT HEIGHT IS TO BE PROVIDED IN ACCORDANCE WITH ALL APPLICABLE CODES INCLUDING BUT NOT LIMITED TO: IBC, IMC, LOCAL CODES, OSHA GUIDELINES (WHERE APPLICABLE). REFER TO ARCHITECTURAL.

Z. ALL CONTROL WIRING AND CONDUIT SHALL COMPLY WITH NEC.

AA. MECHANICAL CONTRACTOR SHALL COORDINATE WITH ELECTRICAL CONTRACTOR AND DRAWINGS FOR CONNECTIONS AND LOCATION OF ALL EQUIPMENT.

AB. CONTRACTOR SHALL PROVIDE ADDITIONAL OFFSETS OR BENDS IN PIPING AS REQUIRED TO ALLOW FOR EXPANSION AND CONTRACTION DUE TO TEMPERATURE CHANGES AND DIFFERENCES IN THE AMBIENT TEMPERATURE WHEN PIPING AND EQUIPMENT IS INSTALLED.

AC. ALL ROOF PENETRATIONS SHALL BE IN COMPLIANCE WITH THE ROOFING MANUFACTURER'S GUIDELINES AND THE AMERICAN ROOFING COUNCIL. CONTRACTOR SHALL BE RESPONSIBLE FOR COMPLIANCE AS NECESSARY TO MAINTAIN ALL WARRANTIES.

AD. STRUCTURAL MEMBERS SHALL NOT BE CUT OR COMPROMISED IN ANY WAY.

AE. DO NOT BLOCK ACCESS TO HVAC OR ELECTRICAL EQUIPMENT. DO NOT INSTALL PIPING, DUCTWORK, OR EQUIPMENT OVER ELECTRICAL PANELS/SWITCHGEAR OR THE 30" x 42" (W x D) CLEARANCE IN FRONT OF THESE ELECTRICAL ITEMS. COORDINATE ADDITIONAL REQUIREMENTS WITH NEC.

Notice

The Architect/Engineer does not define the scope of individual trades, subcontractors, material suppliers, or vendors. Any sheet numbering system used which identifies disciplines is solely for the Architect/Engineer's convenience, and is not intended to define a subcontractor's scope of work. Information regarding individual trades, subcontractors, material suppliers, and vendors may be detailed, described and indicated at different locations throughout these documents. No consideration will be given to requests for change orders for failure to obtain and review the complete set of drawings and specifications when preparing bids, prices, and quotations.

ABBREVIATIONS

GENERAL

AFF	ABOVE FINISHED FLOOR
AMP	AMPERE
ARCH	ARCHITECT
BHP	BRAKE HORSEPOWER
BTU	BRITISH THERMAL UNIT
BTUH	BTU PER HOUR
CFM	CUBIC FEET PER MINUTE
DB	DRY BULB TEMPERATURE
DEG	DEGREE
DDC	DIRECT DIGITAL CONTROL
DIA	DIAMETER
DIM	DIMENSION
DP	DIFFERENTIAL PRESSURE
EA	EXHAUST AIR
EAT	ENTERING AIR TEMPERATURE
ECM	ELECTRONIC COMMUTATED MOTOR
ELEC	ELECTRICAL
ESP	EXTERNAL STATIC PRESSURE
EX	EXISTING
F	FAHRENHEIT
FLA	FULL LOAD AMPS
FLEX	FLEXIBLE
FT	FEET
FT-HD	FEET HEAD
G	GAS
GA	GAUGE
GAL	GALLONS
GALV	GALVANIZED
GC	GENERAL CONTRACTOR
GPM	GALLONS PER MINUTE
HD	HEAD
HP	HORSEPOWER
HZ	HERTZ (FREQUENCY, CYCLES PER SECOND)
IN	INCHES
KW	KILOWATT
L	LENGTH
LAT	LEAVING AIR TEMPERATURE
MAX	MAXIMUM
MBH	THOUSAND BTUH
MCA	MINIMUM CIRCUIT AMPS
MECH	MECHANICAL
MIN	MINIMUM
N/A	NOT APPLICABLE
NC	NOISE CRITERIA
No.	NUMBER
NOM	NOMINAL
NTS	NOT TO SCALE
OA	OUTSIDE AIR
PD	PRESSURE DROP
PH	PHASE
PVC	POLYVINYL CHLORIDE
QTY	QUANTITY
RA	RETURN AIR
RPM	REVOLUTIONS PER MINUTE
SEN	SENSIBLE
SHC	SENSIBLE HEAT CAPACITY
SP	STATIC PRESSURE
SPECS	SPECIFICATIONS
SQ	SQUARE
SF	SQUARE FEET
SUP	SUPPLY
T	TEMPERATURE
TEMP	TEMPERATURE
TSTAT	THERMOSTAT
TON	12,000 BTUH COOLING CAPACITY
TYP	TYPICAL
V	VOLTS (ELECTRICAL)
WB	WET BULB TEMPERATURE

DUCTWORK

EA	EXHAUST AIR
E	EXHAUST GRILLE
FD	FIRE DAMPER (W/ ACCESS DOOR)
MD	MOTOR OPERATED DAMPER
MUA	MAKE-UP AIR
OA	OUTSIDE AIR
OBD	OPPOSED BLADE DAMPER
RA	RETURN AIR
R	RETURN GRILLE
SA	SUPPLY AIR
S	SUPPLY GRILLE
TSP	TOTAL STATIC PRESSURE (IN. WG)
VD	VOLUME DAMPER

EQUIPMENT

DDC	DIRECT DIGITAL CONTROL
EF	EXHAUST FAN
MERV	MINIMUM EFFICIENCY REPORTING VALUE
MUA	MAKE-UP AIR UNIT
RTU	ROOF TOP UNIT

DUCTWORK

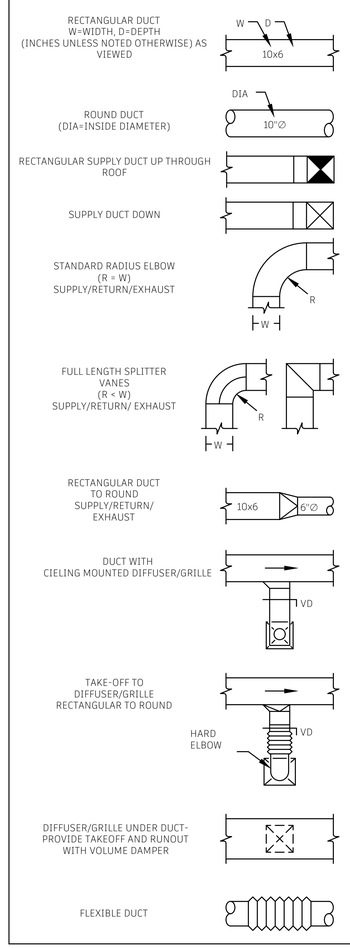

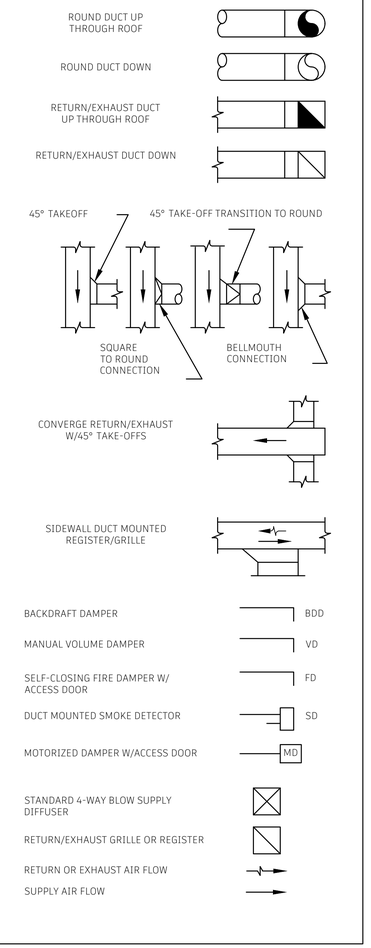

GENERAL SYMBOLOGY

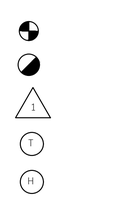

CONNECT NEW TO EXISTING

LIMIT OF DEMOLITION

REVISION NUMBER

TEMPERATURE SENSOR OR THERMOSTAT

HUMIDITY SENSOR OR HUMIDISTAT

NEW WORK INDICATED BY A HEAVY LINEWIEGHT

EXISTING WORK INDICATED BY A MEDIUM LINEWIEGHT

HIDDEN WORK INDICATED BY A LIGHT LINEWIEGHT

AIR DEVICE TAG

S1(100)

(100) CFM TO BALANCE TO

1 = SCHEDULED AIR DEVICE DESIGNATION
X = EXISTING AIR DEVICE TO BE RE-BALANCED
D = EXISTING AIR DEVICE TO BE DEMO'D

S = SUPPLY AIR
R = RETURN AIR
E = EXHAUST AIR
T = TRANSFER AIR

TowerPinkster
ARCHITECTURE • ENGINEERING • INTERIORS
242 East Kalamazoo Avenue, Suite 100
Kalamazoo, Michigan 49007-5828
269.343.5633 FAX
269.343.6133 PHONE
TOWERPINKSTER.COM
© 2021 ALL RIGHTS RESERVED

620 Walnut St.
Jeffersonville, IN 47130
812.282.9554 PHONE

STATE OF KENTUCKY
MALLORY L. P. ANDERSON
36770
LICENSED PROFESSIONAL ENGINEER

ISSUED FOR DATE

Revisions

PROJECT TITLE
2025 RENOVATIONS

OWNER
FIRST HARRISON BANK

130 S. BUCKMAN ST.
SHEPHERDSVILLE, KY 40165

Drawn

Checked By

SHEET TITLE
MECHANICAL GENERAL NOTES AND LEGEND

SHEET NUMBER
M-001

DATE

GENERAL NOTES:

A. ALL DUCTWORK TO BE RUN UP IN EXISTING STEEL BAR JOISTS. TRUNK LINES RUN PARALLEL TO JOISTS. BRANCH DUCTS RUN PERPENDICULAR TO JOISTS AND WILL ROUTE THROUGH WEBBING. COORDINATE EXACT ROUTING WITH EXISTING STRUCTURE; REFER TO ARCHITECTURAL SECTIONS FOR ADDITIONAL INFORMATION.

KEYNOTES:

1. 6"∅ EXHAUST ROUTED THROUGH ROOF. TERMINATE WITH ROOF CAP. COORDINATE WITH EXISTING LOW SLOPED AND PITCHED ROOF STRUCTURES. REFER TO ARCHITECTURAL SECTIONS FOR ADDITIONAL INFORMATION.
2. FLUE AND COMBUSTION AIR CONCENTRIC KIT ROUTED THROUGH ROOF. FLUE FROM FURNACE ROUTED, INSTALLED AND TERMINATED PER MANUFACTURER'S RECOMMENDATIONS AND REQUIREMENTS. REFER TO MANUFACTURER'S REQUIREMENTS FOR LOCATION RESTRICTIONS RELATIVE TO OUTSIDE AIR INTAKES, WINDOWS, DOORS, ETC.
3. CONDENSING UNIT LOCATED ON 3" CONCRETE PAD. COORDINATE FINAL LOCATION WITH ARCHITECTURAL DRAWINGS AND ANY EXTERIOR SEATING.
4. OUTSIDE AIR INTAKE LOCATED A MINIMUM OF 10'-0" FROM RESTROOM EXHAUST.
5. MAINTAIN SERVICE CLEARANCES TO AHU PER MANUFACTURER'S REQUIREMENTS. PROVIDE UNIT WITH FULL SIZE RETURN DUCT PLENUM TO CONNECT TO BOTTOM OF AHU. CONDENSATE FROM AIR HANDLING UNITS ROUTED TO NEAREST FLOOR DRAIN. REFER TO PLUMBING DRAWINGS FOR FLOOR DRAIN LOCATIONS.

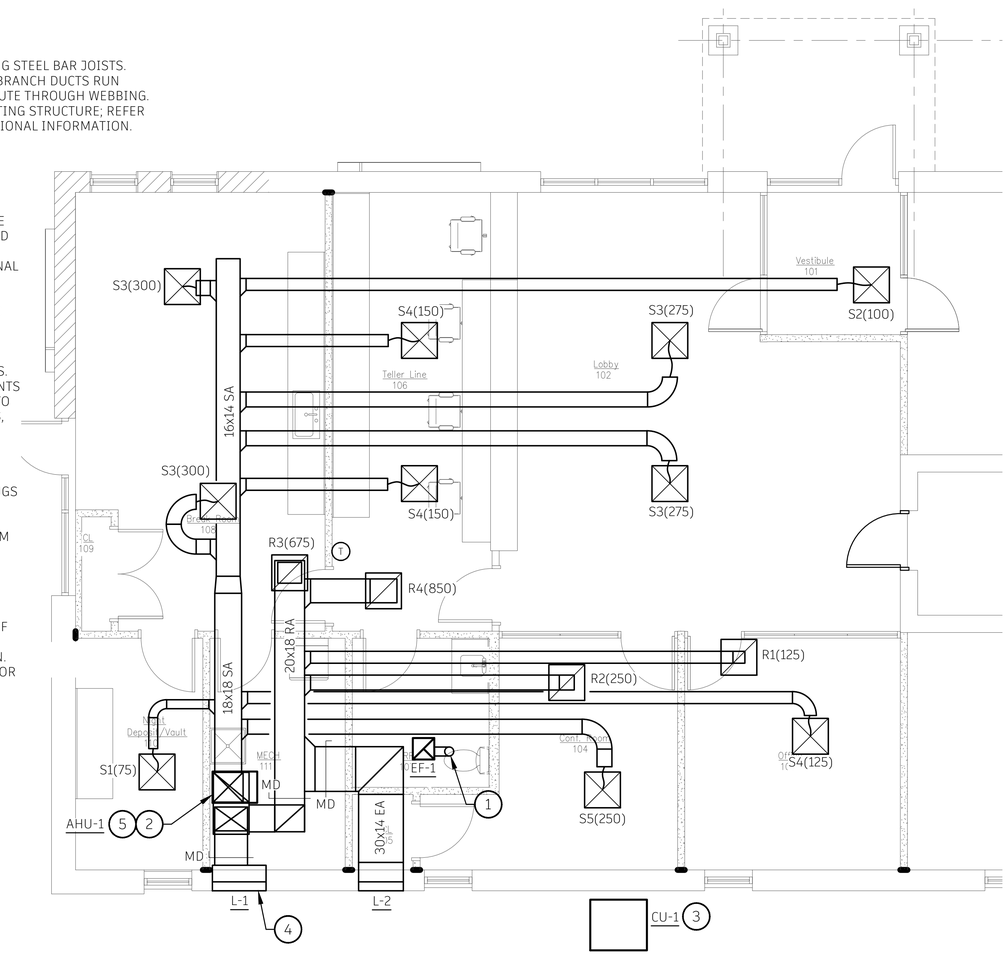

1 MECHANICAL PLAN
1/4" = 1'-0"

Notice

The Architect/Engineer does not define the scope of individual trades, subcontractors, material suppliers, or vendors. Any sheet numbering system used which identifies disciplines is solely for the Architect/Engineer's convenience, and is not intended to define a subcontractor's scope of work. Information regarding individual trades, subcontractors, material suppliers, and vendors may be detailed, described and indicated at different locations throughout these documents. No consideration will be given to requests for change orders for failure to obtain and review the complete set of drawings and specifications when preparing bids, prices, and quotations.

TowerPinkster
ARCHITECTURE • ENGINEERING • INTERIORS
242 East Kalamazoo Avenue, Suite 100
Kalamazoo, Michigan 49007-5828
269.343.6633 FAX
269.343.6133 PHONE
TOWERPINKSTER.COM
620 Walnut St.
Jeffersonville, IN 47130
812.282.9554 PHONE

STATE OF KENTUCKY
MALLORY L. P. ANDERSON
36770
LICENSED PROFESSIONAL ENGINEER

ISSUED FOR	DATE

Revisions

PROJECT TITLE
2025 RENOVATIONS

OWNER
FIRST HARRISON BANK

130 S. BUCKMAN ST.
SHEPHERDSVILLE, KY 40165

Drawn

Checked By

SHEET TITLE
MECHANICAL PLAN

DATE

SHEET NUMBER
M-101

NOTES:

1. PROVIDE ALUMINUM OR GALVANIZED EXPANDED BIRD SCREEN ON INSIDE OF LOUVER. (MINIMUM FREE AREA 80% OF GROSS AREA). ATTACH TO OUTSIDE IF BLADE SEPARATION IS > 2-1/2"
2. CAULK AND SEAL AROUND PERIMETER OF LOUVER SECTION AT WALL.
3. OVERALL SIZE OF OPENING SHOULD BE $\frac{1}{4}$" AND $\frac{1}{4}$" GREATER IN BOTH DIRECTIONS THAN EXTERNAL DIMENSIONS OF LOUVER FOR SIZES <48" AND >48", RESPECTIVELY.
4. MAXIMUM LOUVER WIDTH <5', USE MULLION CONNECTED SECTIONS FOR GREATER WIDTHS.
5. CONSTRUCT LOUVER OF NON-FERROUS, CORROSION RESISTANT MATERIALS AND SECURE WITH STAINLESS STEEL OR ALUMINUM FASTENERS.

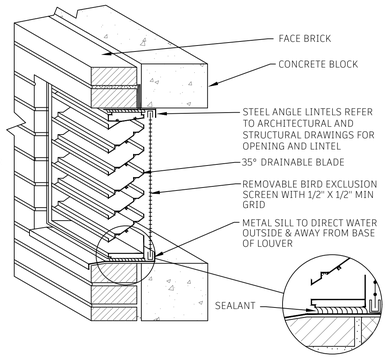

STATIONARY LOUVER IN MASONRY DETAIL

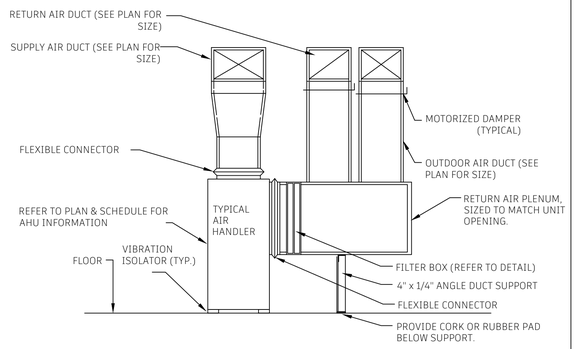

VERTICAL AIR HANDLER DETAIL

NOT TO SCALE

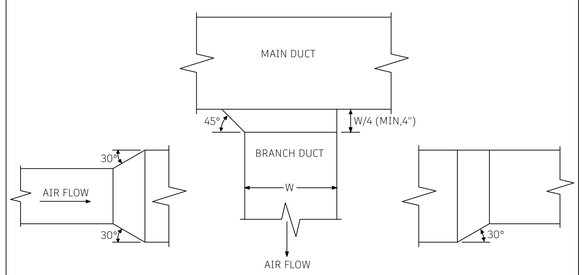

NOTES:

FABRICATE PER SMACNA DUCT CONSTRUCTION STANDARDS

DUCT CONNECTION DETAIL

NOT TO SCALE

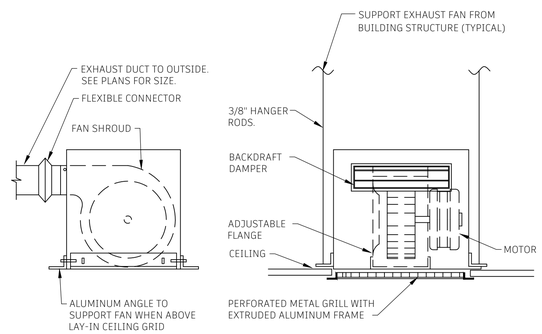

CEILING CABINET FAN DETAIL

NOT TO SCALE

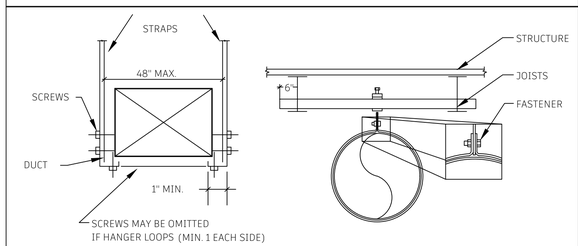

TABLE 2-1		
RECTANGULAR DUCT HANGARS		
MAX SIDE OF RECTANGULAR DUCT	STRAP	SPACING
18"	1"X18GA."	10'0"
30"	1"X18GA."	10'0"
45"	1"X1/8"	10'0"
60"	1"X1/8"	10'0"

TABLE 2-2		
ROUND DUCT HANGARS		
DUCT DIAMETER	STRAP	SPACING
UP TO 10"	1"X26GA."	10'0"
11" TO 20"	1"X24GA."	10'0"
21" TO 37"	1"X22GA."	10'0"
38" TO 40"	1"X20GA."	10'0"

DUCT HANGER DETAIL

NOT TO SCALE

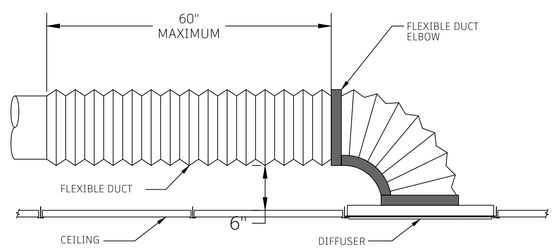

FLEX DUCT CONNECTION TO DIFFUSER DETAIL

NOT TO SCALE

AIR DEVICE SCHEDULE

MARK	MANUFACTURER	MODEL	MAX CFM	MODULE	MOUNTING	DUCT RUN OUT SIZE	REMARKS
S-1	PRICE	SCDA	75	24X24	LAY-IN	6"Ø	ALL
S-2	PRICE	SCDA	200	24X24	LAY-IN / SURFACE	8"Ø	ALL
S-3	PRICE	SCDA	300	24X24	LAY-IN	10"Ø	ALL
S-4	PRICE	VPD	150	24X24	LAY-IN	8"Ø	ALL
S-5	PRICE	VPD	250	24X24	LAY-IN	10"Ø	ALL
R-1	PRICE	80	200	24X24	LAY-IN	8x8	1,2,5,6
R-2	PRICE	80	300	24X24	LAY-IN	10x10	1,2,5,6
R-3	PRICE	80	675	24X24	LAY-IN	16x14	1,2,5,6
R-4	PRICE	80	850	24x24	LAY-IN	18X16	1,2,5,6

REMARKS:
1. PROVIDE WITH WHITE FINISH
2. COORDINATE AIR DEVICE LOCATIONS WITH REFLECTED CEILING PLANS PRIOR TO INSTALLATION. LIGHTING HAS PRIORITY OVER HVAC.
3. PROVIDE SQUARE TO ROUND ADAPTER AS REQUIRED.
4. PROVIDE WITH INSULATED BACK.
5. N.C. SHALL NOT EXCEED 20.
6. PROVIDE WITH APPROPRIATE ACCESSORIES FOR MOUNTING TYPE INDICATED. REFER TO RCP FOR CEILING TYPE.
7. ADJUSTABLE PATTERN DEFLECTORS

OTHER ACCEPTABLE MANUFACTURERS INCLUDE: TITUS, NAILOR. REFER TO SPECIFICATIONS FOR ADDITIONAL REQUIREMENTS.

EXHAUST FAN SCHEDULE

MARK	MANUFACTURER	MODEL	CFM	ESP (IN H20)	DRIVE TYPE	RPM	ELECTRICAL				REMARKS
							V/Ø/Hz	WATTS	MCA	MOCP	
EF-1	GREENHECK	SP-A90	75	0.25	DIRECT	900	115/1/60	15	0.2	15	ALL

REMARKS:
1. PROVIDE WITH UNIT MOUNTED DISCONNECT
2. PROVIDE WITH UNIT MOUNTED SPEED CONTROL
3. PROVIDE WITH APPROPRIATE BACKDRAFT DAMPER
4. EXHAUST FAN TO OPERATE WITH LIGHTING CONTROL.
5. SUPPORT FROM THE STRUCTURE WITH VIBRATION ISOLATION HARDWARE.
6. TERMINATE WITH ROOF CAP.

OTHER ACCEPTABLE MANUFACTURERS INCLUDE: CARNES, COOK. REFER TO SPECIFICATIONS FOR ADDITIONAL REQUIREMENTS.

LOUVER SCHEDULE

MARK	MANUFACTURER	MODEL	INTAKE / RELIEF	SIZE			CFM	PRESSURE DROP (IN)	FREE AREA (SQ FT)	VELOCITY (FPM)	REMARKS
				WIDTH	HEIGHT	DEPTH					
L-1	GREENHECK	ESD-635	INTAKE	36	24	6	2000	0.07	2.8	702	ALL
L-2	GREENHECK	ESD-635	EXHAUST	36	24	6	2000	0.08	2.8	791	ALL

REMARKS:
1. LOUVER COLOR SELECTED BY ARCHITECT
2. COORDINATE LOCATION WITH LIGHTS, STRUCTURE, ETC.
3. ALUMINUM CONSTRUCTION WITH DRAINABLE BLADES
4. MAXIMUM NC LEVEL OF 25
5. PROVIDE BIRD AND INSECT SCREEN
6. PROVIDE WITH MOTORIZED DAMPER AND ACTUATOR.

OTHER ACCEPTABLE MANUFACTURERS INCLUDE: RUSKIN. REFER TO SPECIFICATIONS FOR ADDITIONAL REQUIREMENTS.

VENTILATION SCHEDULE - PER 2015 INTERNATIONAL MECHANICAL CODE

MARK	AREA SERVED	AREA (SQ FT)	ROOM TYPE	CFM/SQ FT	NO. OF OCCUPANTS	CFM/PERSON	EA MAKEUP (CFM)	TOTAL OA REQUIRED (CFM)	TOTAL OA PROVIDED (CFM)
AHU-1 / HP-1	101 VESTIBULE	62	MAIN ENTRY LOBBY	0.06	2	5	-	4	240
	102 LOBBY	500	MAIN ENTRY LOBBY	0.06	10	5	-	30	
	103 OFFICE	156	OFFICE	0.06	4	5	-	29	
	104 CONFERENCE	148	CONFERENCE ROOM	0.06	10	5	-	59	
	106 TELLER	217	OFFICE	0.06	4	5	-	33	
	107 RESTROOM	62	TOILET ROOM	-	-	-	75	-	
	108 BREAKROOM	342	CONFERENCE ROOM	0.06	10	5	-	71	
	110 NIGHT DEPOSIT	92	STORAGE	0.12	-	-	-	11	
	111 MECH	97	-	-	-	-	-	-	

SPLIT SYSTEM SCHEDULE

MARK	MANUFACTURER	MODEL (COIL / FURANCE / HP)	NOMINAL TONNAGE	SUPPLY FAN			SEER	COOLING	SENS. COOLING	NATURAL GAS HEATING		ELECTRICAL - AHU			ELECTRICAL - CU			REMARKS
				SUPPLY AIRFLOW (CFM)	OUTSIDE AIR (CFM)	ESP (IN WC)		CAPACITY @ 95/75F (BTU/hr)	CAPACITY @ 95/75F (BTU/hr)	INPUT (MBH)	OUTPUT (MBH)	V/Ø/Hz	MCA	MOCP	V/Ø/Hz	MCA	MOCP	
AHU-1 / CU-1	JCI	CTM60C5CGS1 / Z9ES080C20SMPS1 / XC360E3S11	5	2,000	240	0.75	13.4	54	38	80	76	115/1/60	14.6	20	208/3/60	24	40	ALL

REMARKS:
1. FURNISH WITH WIRED REMOTE 7-DAY PROGRAMMABLE THERMOSTAT
2. PROVIDE WITH INSULATED, DOUBLE WALL GALVANIZED OR STAINLESS STEEL DRAIN PAN.
3. PROVIDE WITH INTEGRAL DISCONNECT.
4. SINGLE POINT POWER CONNECTION.
5. PROVIDE WITH WATER-LEVEL MONITORING DEVICE (FLOAT SWITCH). DEVICE SHALL BE INSTALLED INSIDE THE PRIMARY DRAIN PAN AND SHALL BE INTERLOCKED TO SHUT DOWN UNIT.
6. PROVIDE LIQUID LINE SPECIALTIES INCLUDING FILTER DRIER, SIGHT GLASS, TXV, SOLENOID VALVE, 24V 1ph CONTROL WIRE BY CONTROLS CONTRACTOR.
7. PROVIDE WITH 2" FILTER.
8. PROVIDE WITH ECONOMIZER CAPABILITIES WITH MOTORIZED DAMPERS ON OUTSIDE AIR, RELIEF AIR, AND RETURN AIR DUCTWORK.

REFER TO SPECIFICATIONS FOR ADDITIONAL REQUIREMENTS. OTHER ACCEPTABLE MANUFACTURERS INCLUDE : DAIKIN, TRANE, AAON, JCI, CARRIER

Notice

The Architect/Engineer does not define the scope of individual trades, subcontractors, material suppliers, or vendors. Any sheet numbering system used which identifies disciplines is solely for the Architect/Engineer's convenience, and is not intended to define a subcontractor's scope of work. Information regarding individual trades, subcontractors, material suppliers, and vendors may be detailed, described and indicated at different locations throughout these documents. No consideration will be given to requests for change orders for failure to obtain and review the complete set of drawings and specifications when preparing bids, prices, and quotations.

TowerPinkster
ARCHITECTURE • ENGINEERING • INTERIORS
242 East Kalamazoo Avenue, Suite 100
Kalamazoo, Michigan 49007-5828
269.343.6633 FAX
269.343.6133 PHONE
TOWERPINKSTER.COM
© 2021 ALL RIGHTS RESERVED

630 Walnut St.
Jeffersonville, IN 47130
812.282.9554 PHONE

STATE OF KENTUCKY
MALLORY L. P. ANDERSON
36770
LICENSED PROFESSIONAL ENGINEER

ISSUED FOR DATE

Revisions

PROJECT TITLE
2025 RENOVATIONS

OWNER
FIRST HARRISON BANK

130 S. BUCKMAN ST.
SHEPHERDSVILLE, KY 40165

Drawn

Checked By

SHEET TITLE
MECHANICAL SCHEDULES

DATE

SHEET NUMBER
M-601

SECTION 23 01 00 - GENERAL PROVISIONS FOR MECHANICAL

PART 1 - GENERAL

1.1 SUMMARY

A. THIS SECTION COVERS THE GENERAL ARRANGEMENT OF THE MECHANICAL SYSTEMS AND RELATED ITEMS TO COMPLETE THE WORK AS SHOWN ON THE DRAWINGS AND AS SPECIFIED HEREIN.

B. THE GENERAL AND SPECIAL CONDITIONS AND ALL OTHER CONTRACT DOCUMENTS ARE APPLICABLE TO WORK UNDER THIS SECTION OF THE SPECIFICATIONS. ALL THE WORK UNDER THIS SECTION OF THE SPECIFICATIONS SHALL BE GOVERNED BY ANY ALTERNATES AND UNIT PRICES CALLED FOR IN THE FORM OF PROPOSAL INSOFAR AS THEY AFFECT THIS PORTION OF THE WORK.

C. THE MECHANICAL CONTRACTOR, HEREIN REFERRED TO AS "CONTRACTOR" UNLESS NOTED OTHERWISE, SHALL FAMILIARIZE HIMSELF WITH THE WORK OF ALL OTHER TRADES, GENERAL TYPE CONSTRUCTION AND THE RELATIONSHIP OF HIS WORK TO OTHER SECTIONS. HE SHALL EXAMINE ALL WORKING DRAWINGS, SPECIFICATIONS AND CONDITIONS AFFECTING HIS WORK. THE CONTRACTOR SHALL VISIT THE PREMISES AND THOROUGHLY FAMILIARIZE HIMSELF WITH ALL DETAILS OF THE WORK AND WORKING CONDITIONS, VERIFY ALL DIMENSIONS IN THE FIELD AND ADVISE THE ENGINEER OF ANY DISCREPANCY BEFORE PERFORMING ANY WORK.

D. THE WORK SHALL INCLUDE COMPLETE TESTING OF ALL EQUIPMENT AND PIPING AT THE COMPLETION OF THE WORK AND MAKING ANY MINOR CONNECTION CHANGES OR ADJUSTMENTS NECESSARY FOR THE PROPER FUNCTIONING OF THE SYSTEM AND EQUIPMENT.

E. THE CONTRACTOR SHALL PERFORM ALL NECESSARY TEMPORARY WORK DURING CONSTRUCTION.

F. WORK UNDER THIS SECTION SHALL CONFORM TO ALL GOVERNING CODES, ORDINANCES AND REGULATIONS OF THE CITY, COUNTY AND STATE.

G. THE CONTRACTOR SHALL BE RESPONSIBLE FOR ALL ERRORS IN FABRICATION, FOR THE CORRECT FITTING, INSTALLATION AND ERECTION OF THE VARIOUS MECHANICAL SYSTEMS AS SHOWN ON THE DRAWINGS.

H. ANY MATERIALS, LABOR, EQUIPMENT, OR SERVICES NOT MENTIONED SPECIFICALLY HEREIN WHICH MAY BE NECESSARY TO COMPLETE ANY PART OF THE MEP/FP SYSTEMS IN A SUBSTANTIAL MANNER AND IN COMPLIANCE WITH THE REQUIREMENTS STATED, IMPLIED, OR INTENDED IN THE PLANS AND/OR SPECIFICATIONS, SHALL BE INCLUDED IN THE BID AS PART OF THIS CONTRACT.

I. THE CONTRACTOR SHALL HOLD HARMLESS AND INDEMNIFY THE ENGINEER, ARCHITECT, EMPLOYEES, OFFICERS, AGENTS AND CONSULTANTS FROM ALL CLAIMS, LOSS, DAMAGE, ACTIONS, CAUSES OF ACTIONS, EXPENSE AND/OR LIABILITY RESULTING FROM, BROUGHT FOR, OR ON ACCOUNT OF ANY PERSONAL INJURY OR PROPERTY DAMAGE RECEIVED OR SUSTAINED BY ANY PERSON, PERSONS, (INCLUDING THIRD PARTIES), OR ANY PROPERTY GROWING OUT OF, OCCURRING, OR ATTRIBUTABLE TO ANY WORK PERFORMED UNDER OR RELATED TO THIS CONTRACT, RESULTING IN WHOLE OR IN PART FROM THE NEGLIGENCE OF THE CONTRACTOR, ANY SUB-CONTRACTOR, ANY EMPLOYEE, AGENT OR REPRESENTATIVE.

1.2 SCOPE

A. THIS BRANCH OF THE WORK INCLUDES COORDINATION WITH ALL REASONABLE UTILITY COMPANIES; AGENCY REVIEW FEES AND ALL INSPECTION FEES; ALL LABOR, MATERIALS, TOOLS, EXCAVATION AND BACKFILL AND ALL EQUIPMENT NECESSARY FOR THE INSTALLATION OF ALL HEATING, VENTILATING AND AIR CONDITIONING, SYSTEM AS SHOWN ON THE DRAWINGS AND SPECIFICATIONS AND/OR AS REQUIRED FOR COMPLETE AND OPERATING SYSTEMS. THE WORK SHALL INCLUDE STARTING, BALANCING, AND THE NECESSARY AND REQUIRED TESTS TO INSURE THE PROPER OPERATION OF THE COMPLETE SYSTEM.

B. IN GENERAL (AS A MINIMUM) ALL MATERIALS AND EQUIPMENT MUST BE INSTALLED IN STRICT ACCORDANCE WITH MANUFACTURER'S REQUIREMENTS; AND PROVIDED WITH ALL REQUIRED CONTROLS, INTERNAL FUSING, RELAYS, PIPING CONNECTIONS, ELECTRICAL CONNECTIONS, DUCTWORK CONNECTIONS, ETC., TO PROVIDE FOR COMPLETE AND OPERABLE SYSTEMS.

C. THE ARCHITECT AND ENGINEER DO NOT DEFINE THE SCOPE OF INDIVIDUAL TRADES, SUB-CONTRACTORS, MATERIAL SUPPLIERS AND VENDORS. ANY SHEET NUMBERING SYSTEM OR SPECIFICATION NUMBERING SYSTEM USED WHICH IDENTIFIES DISCIPLINES IS SOLELY FOR THE ARCHITECT AND ENGINEER'S CONVENIENCE AND IS NOT INTENDED TO DEFINE A SUB-CONTRACTOR'S SCOPE OF WORK. INFORMATION REGARDING INDIVIDUAL TRADES, SUB-CONTRACTORS, MATERIAL SUPPLIERS AND VENDORS MAY BE DETAILED, DESCRIBED, AND INDICATED AT DIFFERENT LOCATIONS THROUGHOUT THE CONTRACT DOCUMENTS. NO CONSIDERATION WILL BE GIVEN TO REQUESTS FOR CHANGE ORDERS FOR FAILURE TO OBTAIN AND REVIEW THE COMPLETE SET OF CONTRACT DOCUMENTS WHEN PREPARING BIDS, PRICES, AND QUOTATIONS. UNLESS STATED OTHERWISE, THE SUBDIVISION AND ASSIGNMENT OF WORK UNDER THE VARIOUS SECTIONS SHALL BE THE RESPONSIBILITY OF THE CONTRACTOR HOLDING THE PRIME CONTRACT.

D. IT IS THE RESPONSIBILITY OF THE BIDDER TO COMPLETELY REVIEW THE CONTRACT DOCUMENTS. ANY INTERPRETATION AS TO DESIGN INTENT OR SCOPE SHALL BE PROVIDED BY THE ENGINEER / ARCHITECT. SHOULD AN INTERPRETATION BE REQUIRED, THE BIDDER SHALL REQUEST A CLARIFICATION NOT LESS THAN TEN (10) DAYS PRIOR TO THE SUBMISSION OF THE PROPOSAL SO THAT THE CONDITION MAY BE CLARIFIED BY ADDENDUM. IN THE EVENT OF ANY CONFLICT, DISCREPANCY, OR INCONSISTENCY DEVELOPS; THE INTERPRETATION OF THE ENGINEER SHALL BE FINAL.

E. THE CONTRACTOR SHALL GIVE WRITTEN NOTICE OF ANY MATERIALS OR APPARATUS BELIEVED INADEQUATE OR UNSUITABLE; IN VIOLATION OF LAWS, ORDINANCES, CODES, RULES, OR REGULATIONS OF AUTHORITIES HAVING JURISDICTION; AND ANY NECESSARY ITEMS OF WORK OMITTED A MINIMUM OF TEN (10) DAYS PRIOR TO BID. IN THE ABSENCE OF SUCH WRITTEN NOTICE AND BY THE ACT OF SUBMITTING A BID, IT SHALL BE UNDERSTOOD THAT THE CONTRACTOR HAS INCLUDED THE COST OF ALL REQUIRED ITEMS IN THE BID, AND THAT WILL BE RESPONSIBLE FOR THE APPROVED SATISFACTORY FUNCTIONING OF THE ENTIRE SYSTEM WITHOUT EXTRA COMPENSATIONS.

F. AS-BUILT DRAWINGS

F.A. THE CONTRACTOR SHALL DELIVER TO THE ENGINEER AT THE COMPLETION OF THE WORK, ONE (1) PRINT OF "AS-BUILT" DRAWINGS, SHOWING LEGIBLY AND ACCURATELY, PLUMBING AND PIPING SYSTEMS WITH EQUIPMENT LOCATIONS SHOWN AS ACTUALLY INSTALLED. CHANGES IN ORIGINAL PLANS SHALL BE NEATLY SHOWN IN RED PENCIL. EACH PRINT SHALL BE SIGNED BY THE SUB-CONTRACTOR WHO HAS DONE THE WORK.

F.B. DURING CONSTRUCTION, THE CONTRACTOR SHALL RETAIN A SET OF BLUE LINE DRAWINGS ON THE SITE FOR RECORDING ALL CHANGES. THESE DRAWINGS SHALL BE AVAILABLE FOR INSPECTION BY THE ENGINEER.

F.C. OPERATION AND MAINTENANCE DATA: SUBMIT (3) SETS OF OPERATING AND MAINTENANCE MANUALS PRIOR TO THE COMPLETION OF THE PROJECT. PROVIDE ON-SITE DEMONSTRATION OF ALL SYSTEMS TO OWNER AFTER SYSTEMS ARE FULLY OPERATIONAL. O&M MANUALS SHALL INCLUDE ALL COMPONENTS (DIFFUSERS, VALVES, ETC.) AS WELL AS SYSTEM DESCRIPTIONS OF ALL SYSTEMS WITH FLOW DIAGRAMS, WIRING DIAGRAMS, WRITTEN WARRANTEES, RECOMMENDED SPARE PARTS AND ROUTINE MAINTENANCE REQUIREMENTS WITH RECOMMENDED INTERVALS FOR ALL MOVING EQUIPMENT AND CONTROLS

1.3 DRAWINGS AND SPECIFICATIONS

A. CONTRACT DRAWINGS FOR WORK UNDER THIS SECTION ARE IN PART DIAGRAMMATIC, INTENDED TO CONVEY THE SCOPE OF WORK AND INDICATE THE GENERAL ARRANGEMENT OF EQUIPMENT, PIPING AND THE APPROXIMATE SIZE AND LOCATION OF EQUIPMENT AND OUTLETS. THE CONTRACTOR SHALL FOLLOW THESE DRAWINGS IN LAYING OUT HIS WORK AND SHALL VERIFY SPACES IN WHICH HIS WORK WILL BE INSTALLED, INDICATING TO THE ENGINEER WHERE ANY CONFLICTS OR OVERLAPPING OF SYSTEMS OCCUR. ANY ITEM OF WORK NOT CLEARLY INCLUDED, SPECIFIED AND/OR SHOWN, ERRORS OR CONFLICT BETWEEN PLANS (MECHANICAL, ARCHITECTURAL, STRUCTURAL OR ELECTRICAL), SPECIFICATIONS, CODES AND FIELD CONDITIONS, SHALL BE CLARIFIED BY A WRITTEN REQUEST TO THE ARCHITECT BY THE BIDDER BEFORE BIDDING; OTHERWISE, THE BIDDER SHALL, AT HIS OWN EXPENSE, SUPPLY THE PROPER LABOR AND MATERIALS TO INCLUDE THESE ITEMS OF WORK AND TO MAKE GOOD ANY DAMAGES OR DEFECTS IN HIS WORK CAUSED BY SUCH ERROR, OMISSION OR CONFLICT. UNDER NO CIRCUMSTANCES SHALL A CONTRACTOR SCALE THE DRAWINGS FOR THE LOCATION OF EQUIPMENT AND WORK.

B. IN THE EVENT THERE IS A CONFLICT WITHIN THE CONTRACT DOCUMENTS, THE CONTRACTOR SHALL NOTIFY THE ENGINEER IMMEDIATELY. IF A CLARIFICATION IS NOT GIVEN, THE CONTRACTOR SHALL BID THE MORE STRINGENT OF THE TWO REQUIREMENTS.

C. SHOULD CONFLICT, OVERLAP OR DUPLICATION OF WORK BETWEEN THE VARIOUS TRADES BECOME EVIDENT, THIS SHALL BE CALLED TO THE ATTENTION OF THE ENGINEER. NEITHER TRADE SHALL ASSUME TO BE RELIEVED OF THE WORK WHICH IS SPECIFIED UNDER THEIR BRANCH UNTIL INSTRUCTIONS IN WRITING ARE RECEIVED FROM THE ENGINEER.

D. WHERE JOB CONDITIONS REQUIRE REASONABLE CHANGES IN INDICATED LOCATIONS AND ARRANGEMENT, PROPOSED DEPARTURES SHALL BE SUBMITTED WITH DETAILED DRAWINGS TO THE ENGINEER FOR APPROVAL BEFORE ANY OF THE PROPOSED WORK IS COMMENCED. ALL APPROVED DEPARTURES SHALL BE MADE AT NO ADDITIONAL COST TO THE OWNER.

E. THE DRAWINGS AND THE SPECIFICATIONS ARE INTENDED TO INDICATE COMPLETE AND WORKING SYSTEMS, UNLESS SPECIFICALLY INDICATED TO THE CONTRARY. THE WORK INCLUDES THE FURNISHING, INSTALLING, AND CONNECTING OF A COMPLETE WORKING INSTALLATION IN EACH CASE TO THE FULL EXTENT SET FORTH IN THE DRAWINGS AND HEREIN SPECIFIED. THE CONTRACTOR SHALL BE RESPONSIBLE FOR THE COMPLETE FUNCTIONING SYSTEM, UNLESS SPECIFICALLY NOTED OTHERWISE.

F. THE DRAWINGS AND SPECIFICATIONS CONSTITUTE THE CONTRACT DOCUMENTS AND SHALL BE CONSIDERED AS COOPERATIVE. WORK AND MATERIAL INCLUDED IN EITHER, THOUGH NOT MENTIONED IN BOTH, SHALL BE A PART OF THE WORK TO BE ACCOMPLISHED AND SHALL BE CARRIED OUT COMPLETELY IN AS THOROUGH MANNER AS IF COVERED BY BOTH. ALL ITEMS SHOWN ON THE DRAWINGS AND/OR LISTED IN THE SPECIFICATIONS SHALL BE PROVIDED AND INSTALLED BY THE CONTRACTOR UNLESS SPECIFICALLY NOTED THAT IT WILL BE PROVIDED AND/OR INSTALLED BY OTHERS. IN THE EVENT THERE IS A CONFLICT WITHIN THE CONTRACT DOCUMENTS, THE CONTRACTOR SHALL NOTIFY THE ENGINEER IMMEDIATELY. IF A CLARIFICATION IS NOT GIVEN, THE CONTRACTOR SHALL BID THE MORE STRINGENT OF THE TWO REQUIREMENTS.

G. BECAUSE OF THE SMALL SCALE OF THE DRAWINGS, IT IS NOT POSSIBLE TO INDICATE ALL OFFSETS, FITTINGS AND ACCESSORIES THAT MAY BE REQUIRED. THE CONTRACTOR SHALL CAREFULLY INVESTIGATE THE STRUCTURAL AND FINISH CONDITIONS AFFECTING ALL HIS WORK AND SHALL ARRANGE SUCH WORK, ACCORDINGLY, FURNISHING SUCH FITTINGS, PIPE, TRAPS, VALVES, AND ACCESSORIES AS MAY BE REQUIRED TO MAKE A FUNCTIONAL INSTALLATION AT NO ADDITIONAL COST TO THE OWNER..

H. EACH CONTRACTOR SHALL REFER TO THE ARCHITECTURAL AND STRUCTURAL DRAWINGS AND SPECIFICATIONS FOR THE GENERAL CONSTRUCTION OF THE BUILDING, FOR FLOOR AND CEILING HEIGHTS, FOR LOCATION OF WALLS, PARTITIONS, BEAMS ETC., AND SHALL BE GUIDED ACCORDINGLY FOR THE SETTING OF ALL SLEEVES AND EQUIPMENT.

I. UNDER NO CIRCUMSTANCES SHALL A CONTRACTOR SCALE THE DRAWINGS FOR THE LOCATIONS OF EQUIPMENT AND WORK.

J. COORDINATION: CONFER WITH ALL OTHER TRADES RELATIVE TO LOCATION OF ALL APPARATUS AND EQUIPMENT TO BE INSTALLED AND SELECT LOCATIONS SO AS NOT TO CONFLICT WITH OR HINDER THE PROGRESS OF THE WORK OF OTHER SECTIONS. WORK INSTALLED THAT CREATES INTERFERENCE OR RESTRICTS ACCESS REQUIRED BY CODE (INCLUDING CLEARANCES TO ELECTRICAL COMPONENTS) OR TO CONDUCT MAINTENANCE AND/OR ADJUSTMENTS SHALL BE MODIFIED AT ADDITIONAL COST TO THE OWNER.

K. CODES, STANDARDS, AUTHORITIES AND PERMITS: CODES, LAWS AND ORDINANCES PROVIDE A BASIS FOR THE MINIMUM INSTALLATION CRITERIA. THESE DRAWINGS AND SPECIFICATIONS ILLUSTRATE THE SCOPE REQUIRED FOR THIS PROJECT, WHICH MAY EXCEED MINIMUM CODE, LAW AND STANDARDS CRITERIA. GIVE NOTICES, FILE PLANS, OBTAIN PERMITS AND LICENSES, PAY FEES AND BACKCHARGES AND OBTAIN NECESSARY APPROVALS FROM AUTHORITIES HAVING JURISDICTION AS REQUIRED FOR THE EXECUTION OF ALL WORK ASSOCIATED WITH THIS PROJECT. ALL WORK SHALL BE PERFORMED IN ACCORDANCE WITH THE LATEST EDITIONS OF: 1) THE STATE BUILDING, ELECTRICAL, MECHANICAL, AND ENERGY CODES, 2) SMACNA, NFPA, ANSI/ASHRAE, ASME, UL, AND NEMA STANDARDS, 3) ALL OTHER APPLICABLE CODES, REGULATIONS, STANDARDS AND LAWS OF LOCAL, STATE AND FEDERAL GOVERNMENT AND OTHER AUTHORITIES HAVING JURISDICTION, AND 4) APPLICABLE BASE BUILDING STANDARDS AND SPECIFICATIONS.

1.4 EXAMINATION OF SITE

A. BIDDERS SHALL VISIT THE SITE BEFORE SUBMITTING PROPOSALS TO SATISFY THEMSELVES AS TO THE NATURE AND SCOPE OF THE WORK AND ANY DIFFICULTIES ATTENDING TO THE EXECUTION.

B. THE SUBMISSION OF A PROPOSAL WILL BE CONSTRUED AS EVIDENCE THAT SUCH AN EXAMINATION HAS BEEN MADE. LATER CLAIMS FOR LABOR, EQUIPMENT, MATERIALS, ETC., REQUIRED FOR DIFFICULTIES ENCOUNTERED WHICH COULD HAVE BEEN FORESEEN HAD SUCH AN EXAMINATION BEEN MADE, WILL NOT BE RECOGNIZED.

1.5 CUTTING AND PATCHING

A. ALL CUTTING AND PATCHING REQUIRED IN CONNECTION WITH THE INSTALLATION OF THIS WORK, AND WORK DUE TO ERRORS, DEFECTIVE WORK, ILL-TIMED WORK, OR TARDINESS IN PROPERLY DESIGNATING SIZE AND LOCATION IN SUFFICIENT TIME OR BY FAILURE TO NOTIFY OTHER TRADES, SHALL BE DONE UNDER THIS SECTION, BUT ONLY IN THE MANNER DIRECTED BY THE ENGINEER SO AS TO PREVENT OR MINIMIZE DAMAGE TO INSTALLED WORK. DAMAGE AS A RESULT OF CUTTING FOR INSTALLATION, SHALL BE REPAIRED BY MECHANICS SKILLED IN THE TRADE INVOLVED, AT NO ADDITIONAL EXPENSE TO THE OWNER.

B. NO CUTTING OF STRUCTURAL MEMBERS WILL BE PERMITTED, EXCEPT WHEN PRIOR PERMISSION OF THE ENGINEER HAS BEEN OBTAINED. THIS WORK MUST CONFORM IN EVERY RESPECT TO THE SURROUNDING FINISH AND TO THE QUALITY OF WORKMANSHIP AND MATERIALS USED.

C. PIERCING OF ANY WATERPROOFING OR ROOFING SHALL BE DONE ONLY BY THE TRADE INVOLVED. AFTER THE PART PIERCING THE WATERPROOFING HAS BEEN SET IN PLACE, THE OPENING MADE FOR THIS PURPOSE SHALL BE FILLED AND MADE ABSOLUTELY WATERTIGHT TO THE SATISFACTION OF THE ENGINEER.

D. SEE SECTION: 230517 - SLEEVING, CUTTING, PATCHING AND REPAIRING - MECHANICAL

1.6 FIRE AND SMOKE-STOPPING

A. FIRE-STOPPING AND SMOKE-STOPPING SHALL BE PROVIDED AROUND ALL PIPING AND DUCTWORK PENETRATIONS OF FIRE RATED AND/OR SMOKE-RATED FLOORS, WALLS, CEILINGS, OR OTHER BARRIERS.

B. THE MATERIALS USED SHALL BE UL 263 OR UL 1479 CLASSIFIED AND MEET ASTM E814 STANDARDS AND BE RATED FOR ASSEMBLIES WHERE APPLIED.

C. CLEAN SURFACES TO BE IN CONTACT WITH PENETRATION SEAL MATERIALS, OF DIRT, GREASE, OIL, LOOSE MATERIALS, RUST, OR OTHER SUBSTANCES THAT MAY AFFECT PROPER FITTING, ADHESION, OR THE REQUIRED FIRE RESISTANCE.

D. INSTALL PENETRATION SEAL MATERIALS IN ACCORDANCE WITH MANUFACTURER'S INSTRUCTION.

E. SEAL HOLES OR VOIDS MAY BE PENETRATIONS TO ENSURE AN EFFECTIVE FIRE AND/OR SMOKE BARRIER.

F. PROTECT MATERIALS FROM DAMAGE ON SURFACES SUBJECT TO TRAFFIC.

G. STOP INSULATION FLUSH WITH WALL ON INSULATED PIPE AND SEAL EDGES.

H. ALL EXPOSED PIPING PASSING THROUGH FLOORS, CEILINGS AND WALLS IN FINISHED AREAS SHALL BE FITTED WITH A CHROME PLATED ESCUTCHEON OF SUFFICIENT OUTSIDE DIAMETER TO AMPLY COVER THE SLEEVED OPENING AND AD INSIDE DIAMETER TO CLOSELY FIT THE PIPE AROUND WHICH IT IS INSTALLED.

I. GALVANIZED SHEET METAL COLLARS SHALL BE PROVIDED AROUND ALL DUCTS, EQUIPMENT, ETC., EXPOSED IN FINISHED AREAS. WHERE SUCH OPENINGS ARE FINISHED AND THE SPACE AROUND THE UNIT IS SMALL, THE COLLAR MAY BE OMITTED WITH THE APPROVAL OF THE ARCHITECT.

1.7 ACCESS PANELS

A. THE MECHANICAL CONTRACTOR SHALL FURNISH ALL OTHER ACCESS PANELS NEEDED FOR ACCESS TO VALVES, OPEN RECEPTACLES, VENTS, FIRE DAMPERS, MECHANICAL UNITS, ETC., IN INACCESSIBLE LOCATIONS INSTALLED UNDER THIS DIVISION OF THE WORK.

B. ACCESS PANELS SHALL HAVE A MINIMUM SIZE OF 12" X 12" AND SHALL BE CENTERED BENEATH EQUIPMENT FOR ACCESSIBILITY AND MAINTENANCE. ACCESS PANELS MUST BE OF ADEQUATE SIZE TO SERVICE, OBSERVE, REMOVE, AND MAINTAIN EQUIPMENT.

C. ACCESS PANELS SHALL BE EQUAL TO THE TYPES SPECIFIED UNDER THE ARCHITECTURAL SPECIFICATIONS. AS A MINIMUM THE ACCESS PANELS SHALL BE EQUIVALENT TO ACUDOR PRODUCTS, CENDREX, INC., MIFAB, INC., LANE-AIRE MANUFACTURING, 14 GAUGE WITH VANDAL PROOF LOCK AND FRAME AS SELECTED BY ARCHITECT. ACCESS PANELS SHALL BE FIRE RATED WHEN INSTALLED IN FIRE RATED CONSTRUCTION.

D. ACCESS PANELS SHALL HAVE A PRIMED WHITE FINISH.

E. CEILING TYPES

1. IN AREAS WITH SUSPENDED ACOUSTICAL TILE CEILINGS (INSTALLED ON EXPOSED METAL GRID SUSPENSION SYSTEM SO THAT THE TILE MAY BE READILY REMOVED), EQUIPMENT, VALVES, ETC., INSTALL ABOVE THESE CEILINGS WILL BE CONSIDERED TO BE ACCESSIBLE.
2. ALL PLASTERED CEILINGS OR CEILINGS HAVING CONCEALED SPLINE TYPE OF SUSPENSION SYSTEM WILL BE CONSIDERED AS NOT REMOVABLE FOR ACCESSIBILITY TO EQUIPMENT; THEREFORE, ACCESS PANELS WILL BE REQUIRED.
3. SEE ARCHITECTURAL DRAWINGS AND SPECIFICATIONS FOR THE TYPES OF CEILINGS THROUGHOUT THE BUILDING.

F. ACCESS PANELS SHALL BE INSTALLED BY SUB-CONTRACTOR SPECIALIZED IN ACCESS PANEL INSTALLATION.

1.8 WARRANTY AND SERVICE

A. ALL EQUIPMENT SHALL BE WARRANTED FOR A PERIOD OF AT LEAST ONE (1) YEAR FROM THE DATE OF INSTALL, AS EVIDENCED BY DATE OF SUBSTANTIAL COMPLETION FOR THE ENTIRE PROJECT.

1.10 SAFETY PRECAUTIONS: LIFE SAFETY AND ACCIDENT PREVENTION SHALL BE A PRIMARY CONSIDERATION. COMPLY WITH ALL OF THE SAFETY REQUIREMENTS OF THE OWNER AND OSHA THROUGHOUT THE ENTIRE CONSTRUCTION PERIOD OF THE PROJECT. FURNISH, PLACE AND MAINTAIN PROPER GUARDS AND ANY OTHER NECESSARY CONSTRUCTION REQUIRED TO SECURE SAFETY OF LIFE AND PROPERTY.

SECTION 23 05 17 - SLEEVING, CUTTING, PATCHING AND REPAIRING FOR MECHANICAL

PART 1 - GENERAL

1.1 SUMMARY

A. THIS SECTION INCLUDES REQUIREMENTS FOR THE MECHANICAL CONTRACTOR RELATED TO SLEEVING, CUTTING, PATCHING, AND REPAIRING ASSOCIATED WITH MECHANICAL WORK.

1.2 WORK INCLUDED

A. SLEEVES AND ESCUTCHEONS

PART 2 - PRODUCTS

2.1 SLEEVES

A. CAST-IRON WALL PIPES: CAST OR FABRICATED OF CAST OR DUCTILE IRON AND EQUIVALENT TO DUCTILE-IRON PRESSURE PIPE, WITH PLAIN ENDS AND INTEGRAL WATER STOP UNLESS OTHERWISE INDICATED.

B. GALVANIZED-STEEL WALL PIPES: ASTM A 53/A 53M, SCHEDULE 40, WITH PLAIN ENDS AND WELDED STEEL COLLAR; ZINC COATED.

C. GALVANIZED-STEEL-PIPE SLEEVES: ASTM A 53/A 53M, TYPE E, GRADE B, SCHEDULE 40, ZINC COATED, WITH PLAIN ENDS.

D. PVC-PIPE SLEEVES: ASTM D 1785, SCHEDULE 40.

E. GALVANIZED-STEEL-SHEET SLEEVES: 0.0239-INCH MINIMUM THICKNESS, ROUND TUBE CLOSED WITH LONGITUDINAL JOINT.

2.2 ESCUTCHEONS

A. ESCUTCHEONS SHALL BE BEATON AND CALDWELL; CARPENTER AND PATTERSON; FEE AND MASON OR APPROVED EQUIVALENT. CHROMIUM-PLATED IRON OR CHROMIUM-PLATED BRASS, EITHER ONE PIECE OR SPLIT PATTERNS, HELD IN PLACE BY INTERNAL SPRING TENSION OR SET SCREW THAT COMPLETELY COVERS OPENING.

PART 3 - EXECUTION

3.1 GENERAL

A. THE CONTRACTOR SHALL BE RESPONSIBLE FOR ALL OPENINGS, SLEEVES, TRENCHES, ETC., THAT HE MAY REQUIRE OR CREATE BY DEMOLITION IN FLOORS, ROOFS, CEILINGS, WALLS, ETC., AND SHALL COORDINATE ALL SUCH WORK WITH THE GENERAL CONTRACTOR AND ALL OTHER TRADES. COORDINATE WITH THE GENERAL CONTRACTOR, ANY OPENINGS WHICH HE IS TO PROVIDE BEFORE SUBMITTING A BID PROPOSAL IN ORDER TO AVOID CONFLICT AND DISAGREEMENT DURING CONSTRUCTION. IMPROPERLY LOCATED OPENINGS SHALL BE REWORKED AT THE EXPENSE OF THE CONTRACTOR.

B. THE CONTRACTOR SHALL PLAN HIS WORK AHEAD AND SHALL PLACE SLEEVES, FRAMES OR FORMS THROUGH THE WALLS, FLOORS, AND CEILINGS DURING THE INITIAL CONSTRUCTION, WHERE IT IS NECESSARY FOR PIPING, DUCTWORK, CONDUIT, ETC., TO GO THROUGHOUT; HOWEVER, WHEN THIS IS NOT DONE, THE CONTRACTOR SHALL DO ALL CUTTING AND PATCHING REQUIRED FOR THE INSTALLATION OF HIS WORK, OR HE SHALL PAY OTHER TRADES FOR DOING THIS WORK WHEN SO DIRECTED BY THE ENGINEER. ANY DAMAGE CAUSED TO THE BUILDINGS BY THE WORKMEN OF THE RESPONSIBLE CONTRACTOR MUST BE CORRECTED OR RECTIFIED BY HIM AT HIS OWN EXPENSE.

C. THE CONTRACTOR SHALL NOTIFY OTHER TRADES IN DUE TIME WHERE HE WILL REQUIRE OPENINGS OR CHASES IN NEW CONCRETE OR MASONRY. HE SHALL SET ALL CONCRETE INSERTS AND SLEEVES FOR HIS WORK. FAILING TO DO THIS, HE SHALL CUT OPENINGS FOR HIS WORK AND PATCH SAME AS REQUIRED AT HIS OWN EXPENSE.

D. THE CONTRACTOR SHALL BE RESPONSIBLE FOR PROPERLY SHORING, BRACING, SUPPORTING, ETC., ANY EXISTING AND/OR NEW CONSTRUCTION TO GUARD AGAINST CRACKING, SETTLING, COLLAPSING, DISPLACING, OR WEAKENING WHILE OPENINGS ARE BEING MADE. ANY DAMAGE OCCURRING TO THE EXISTING AND/OR NEW STRUCTURES, DUE TO FAILURE TO EXERCISE PROPER PRECAUTIONS OR DUE TO ACTION OF THE ELEMENTS SHALL BE PROMPTLY AND PROPERLY MADE GOOD TO THE SATISFACTION OF THE ENGINEER.

E. ALL WORK IMPROPERLY DONE OR NOT DONE AT ALL AS REQUIRED BY THE MECHANICAL TRADES IN THIS SECTION, WILL BE PERFORMED BY THE CONTRACTOR AT THE DIRECTION OF THE TRADE WHOSE WORK IS AFFECTED.

3.2 SLEEVES

A. INSTALL SLEEVES FOR PIPING PASSING THROUGH PENETRATIONS IN FLOORS, PARTITIONS, ROOFS, AND WALLS.

B. FOR SLEEVES THAT WILL HAVE SLEEVE-SEAL SYSTEM INSTALLED, SELECT SLEEVES OF SIZE LARGE ENOUGH TO PROVIDE 1-INCH ANNULAR CLEAR SPACE BETWEEN PIPING AND CONCRETE SLABS AND WALLS.

1. SLEEVES ARE NOT REQUIRED FOR CORE-DRILLED HOLES.

C. INSTALL SLEEVES IN CONCRETE FLOORS, CONCRETE ROOF SLABS, AND CONCRETE WALLS AS NEW SLABS AND WALLS ARE CONSTRUCTED.

1. CUT SLEEVES TO LENGTH FOR MOUNTING FLUSH WITH BOTH SURFACES.
    a. EXCEPTION: EXTEND SLEEVES INSTALLED IN FLOORS OF MECHANICAL EQUIPMENT AREAS OR OTHER WET AREAS 2 INCHES ABOVE FINISHED FLOOR LEVEL.
2. USING GROUT, SEAL THE SPACE OUTSIDE OF SLEEVES IN SLABS AND WALLS WITHOUT SLEEVE-SEAL SYSTEM.

D. INSTALL SLEEVES FOR PIPES PASSING THROUGH INTERIOR PARTITIONS.

1. CUT SLEEVES TO LENGTH FOR MOUNTING FLUSH WITH BOTH SURFACES.
2. INSTALL SLEEVES THAT ARE LARGE ENOUGH TO PROVIDE 1/4-INCH (6.4-MM) ANNULAR CLEAR SPACE BETWEEN SLEEVE AND PIPE OR PIPE INSULATION.
3. SEAL ANNULAR SPACE BETWEEN SLEEVE AND PIPING OR PIPING INSULATION; USE JOINT SEALANTS APPROPRIATE FOR SIZE, DEPTH, AND LOCATION OF JOINT.

E. FIRE-BARRIER PENETRATIONS: MAINTAIN INDICATED FIRE RATING OF WALLS, PARTITIONS, CEILINGS, AND FLOORS AT PIPE PENETRATIONS. SEAL PIPE PENETRATIONS WITH FIRESTOP MATERIALS.

F. PIPES PASSING THROUGH WATERPROOFING MEMBRANES: PIPES PASSING THROUGH FLOOR WATERPROOFING MEMBRANE SHALL BE INSTALLED THROUGH A 4-POUND LEAD-FLASHING SLEEVE, OR A 0.032-INCH THICK ALUMINUM SLEEVE, EACH WITH AN INTEGRAL SKIRT OR FLANGE. FLASHING SLEEVE SHALL BE SUITABLY FORMED, AND THE SKIRT OF FLANGE SHALL EXTEND NOT LESS THAN 8 INCHES FROM THE PIPE AND SHALL SET OVER THE FLOOR MEMBRANE IN A TROWELED COATING OF BITUMINOUS CEMENT. THE FLASHING SLEEVE SHALL EXTEND UP THE PIPE A MINIMUM OF 1 INCH ABOVE THE FLOOR. THE ANNULAR SPACE BETWEEN THE FLASHING SLEEVE AND THE METAL-JACKET-COVERED INSULATION SHALL BE SEALED. AT THE CONTRACTOR'S OPTION, PIPES PASSING THROUGH FLOOR WATERPROOFING MEMBRANE MAY BE INSTALLED THROUGH A CAST IRON SLEEVE WITH CAULKING RECESS, ANCHOR LUGS, FLASHING CLAMP DEVICE, AND A PRESSURE RING WITH BRASS BOLTS. WATERPROOFING MEMBRANE SHALL BE CLAMPED INTO SPACE AND SEALANT SHALL BE PLACED IN THE CAULKING RECESS.

G. PIPES PASSING THROUGH ROOF: PIPES PASSING THROUGH THE ROOF SHALL BE INSTALLED WHERE SHOWN ON THE DRAWINGS. ANY PENETRATION IN ROOF SHALL BE APPROVED BY THE ROOFING MANUFACTURER.

H. OPENINGS FOR DUCTWORK, FIXTURES, EQUIPMENT, ETC. THROUGH FLOORS, WALLS, CEILING, AND ROOFS, SHALL BE LOCATED AND SIZED BY THE CONTRACTOR UNDER THIS DIVISION WHO SHALL PROVIDE AND SET NECESSARY LINTELS, SLEEVES, AND SHEET METAL FORMS FOR ALL SUCH OPENINGS.

I. GALVANIZED SHEET METAL COLLARS SHALL BE PROVIDED AROUND ALL DUCTS, EQUIPMENT, ETC., EXPOSED IN FINISHED AREAS. WHERE SUCH OPENINGS AND FINISHED AND THE SPACE AROUND THE PENETRATION IS SMALL, THE COLLAR MAY BE OMITTED WITH THE APPROVAL OF THE ARCHITECT/ENGINEER.

3.3 ESCUTCHEONS

A. ESCUTCHEONS SHALL BE PROVIDED AT ALL FINISHED SURFACES WHERE EXPOSED PIPING, BARE OR INSULATED, PASSES THROUGH FLOORS, WALLS, OR CEILINGS. ESCUTCHEONS SHALL BE FASTENED SECURELY TO PIPE SLEEVES OR TO EXTENSIONS OF SLEEVES WITHOUT ANY PART OF SLEEVES BEING VISIBLE. WHERE SLEEVES PROJECT SLIGHTLY FROM FLOORS, SPECIAL DEEP-TYPE ESCUTCHEONS SHALL BE USED.

3.4 CUTTING

A. ALL RECTANGULAR OR SPECIAL SHAPED OPENINGS IN PLASTER, STUCCO, OR SIMILAR MATERIALS, INCLUDING GYPSUM BOARD, SHALL BE FRAMED BY MEANS OF PLASTER FRAMES, CASING BEADS, WOOD OR METAL ANGLE MEMBERS AS REQUIRED. THE INTENT OF THIS REQUIREMENT IS TO PROVIDE SMOOTH EVEN TERMINATION OF WALL, FLOOR, AND CEILING FINISHES AS WELL AS TO PROVIDE A FASTENING MEANS FOR GRILLES, DIFFUSERS, LIGHTING FIXTURES, ETC.

B. ALL TRADES SHALL COORDINATE ALL OPENINGS IN MASONRY WALLS WITH THE GENERAL CONTRACTOR, AND, UNLESS OTHERWISE INDICATED ON THE ARCHITECTURAL DRAWINGS, SHALL PROVIDE LINTELS FOR ALL OPENINGS REQUIRED FOR THE PLUMBING WORK (PIPING, WALL BOXES, ETC.).

C. NO CUTTING IS TO BE DONE AT POINTS OR IN A MANNER THAT WILL WEAKEN THE STRUCTURE AND UNNECESSARY CUTTING MUST BE AVOIDED. IF IN DOUBT, CONTACT THE ENGINEER.

D. PIPE OPENINGS IN SLABS AND WALLS SHALL BE CUT WITH CORE DRILL. HAMMER DEVICES WILL NOT BE PERMITTED. EDGES OF TRENCHES AND LARGE OPENINGS SHALL BE SCRIBE CUT WITH A MASONRY SAW.

E. OPENINGS IN METAL BUILDING WALLS SHALL BE MADE IN STRICT ACCORD WITH BUILDING SUPPLIERS RECOMMENDATIONS.

3.5 PATCHING AND REPAIRING

A. PATCHING AND REPAIRING MADE NECESSARY BY WORK PERFORMED UNDER THIS DIVISION SHALL BE INCLUDED AS PART OF THE WORK AND SHALL BE DONE BY SKILLED MECHANICS OF THE TRADE OR TRADES FOR WORK CUT OR DAMAGED, IN STRICT ACCORDANCE WITH THE PROVISIONS HEREIN BEFORE SPECIFIED FOR WORK OF LIKE TYPE TO MATCH ADJACENT SURFACES AND IN A MANNER ACCEPTABLE TO THE ENGINEER.

B. WHERE PORTIONS OF EXISTING LAWNS, SHRUBS, PAVING, ETC. ARE DISTURBED FOR INSTALLATION OR WORK OF THIS DIVISION, SUCH ITEMS SHALL BE REPAIRED AND/OR REPLACED TO THE SATISFACTION OF THE ENGINEER.

C. WHERE THE INSTALLATION OR REMOVAL OF PIPING, ETC. REQUIRES OR CREATES THE PENETRATION OF FIRE OR SMOKED RATED WALLS, CEILINGS OR FLOORS, THE SPACE AROUND SUCH PIPE, ETC., SHALL BE TIGHTLY FILLED WITH AN APPROVED NON-COMBUSTIBLE FIRE INSULATING MATERIAL SATISFACTORY TO MAINTAIN THE RATING INTEGRITY OF THE WALL, FLOOR OR CEILINGS AFFECTED.

D. PIPING PASSING THROUGH FLOORS, CEILINGS, AND WALLS IN FINISHED AREAS, UNLESS OTHERWISE SPECIFIED, SHALL BE FITTED WITH CHROME PLATED BRASS ESCUTCHEONS OF SUFFICIENT OUTSIDE DIAMETER TO AMPLY COVER THE SLEEVED OPENINGS AND AN INSIDE DIAMETER TO CLOSELY FIT THE PIPE AROUND WHICH IT IS INSTALLED.

E. WHERE PIPES PASS THROUGH EXTERIOR WALLS, THE WALL OPENINGS SHALL BE SEALED AIR AND WATERTIGHT. THIS SHALL INCLUDE SEALING ON BOTH SIDES OF THE WALL TO ENSURE AIR AND WATER DOES NOT ENTER OR EXIT THE WALL CAVITY. THIS IS ESPECIALLY CRITICAL ON EXTERIOR WALLS WHERE THE WALL CAVITY MAY BE VENTED TO THE EXTERIOR.

SECTION 23 05 29 - HANGERS AND SUPPORTS FOR HVAC PIPING AND EQUIPMENT

PART 1- GENERAL

1.1 WORK INCLUDED

A. PIPE AND EQUIPMENT HANGERS, SUPPORTS, AND ASSOCIATED ANCHORS

1.2 ACTION SUBMITTALS

A. SHOP DRAWINGS: FOR EACH TYPE OF PRODUCT.

1.3 SCOPE

A. THIS SPECIFICATION SHALL APPLY FOR THE DESIGN AND FABRICATION OF ALL HANGERS, SUPPORTS, ANCHORS AND GUIDES. WHERE PIPING DESIGN IS SUCH THAT EXCEPTIONS TO THIS SPECIFICATION ARE NECESSARY, THE SYSTEM SHALL BE IDENTIFIED, AND THE EXCEPTIONS APPROVED BY ENGINEER PRIOR TO INSTALLATION.

1.4 STRUCTURE

A. THIS SECTION IS INTENDED TO COVER THE STRUCTURAL REQUIREMENTS OF THE PIPING AND EQUIPMENT. IT IS NOT INTENDED TO IMPLY THAT THE BUILDING STRUCTURE WILL SUPPORT THE LOADS IMPOSED. THE CONTRACTOR SHALL REVIEW THE STRUCTURAL DRAWINGS FOR WHERE LOADS CAN BE APPLIED, WHAT LOAD CAN BE SUPPORTED AND WHAT STRUCTURAL REINFORCING IS REQUIRED. SPECIFIC QUESTIONS CAN BE DIRECTED TO THE STRUCTURAL ENGINEER PRIOR TO BIDDING.

1.5 DESIGN

A. ALL SUPPORTS AND PARTS SHALL CONFORM TO THE LATEST REQUIREMENTS OF THE ANSI CODE FOR PRESSURE PIPING B31.1.0, AND MSS STANDARD PRACTICE SP-58, SP-69 AND SP-89 EXCEPT AS SUPPLEMENTED OR MODIFIED BY THE REQUIREMENTS OF THIS SPECIFICATION.

B. DESIGNS GENERALLY ACCEPTED AS EXEMPLIFYING GOOD ENGINEERING PRACTICE, USING STOCK OR PRODUCTION PARTS, SHALL BE UTILIZED WHEREVER POSSIBLE.

C. ACCURATE WEIGHT BALANCE CALCULATIONS SHALL BE MADE TO DETERMINE THE REQUIRED SUPPORTING FORCE AT EACH HANGER LOCATION AND THE PIPE WEIGHT LOAD AT EACH EQUIPMENT CONNECTION.

D. PIPE HANGERS SHALL BE CAPABLE OF SUPPORTING THE PIPE IN ALL CONDITIONS OF OPERATION. THEY SHALL ALLOW FREE EXPANSION AND CONTRACTION OF THE PIPING, AND PREVENT EXCESSIVE STRESS RESULTING FROM TRANSFERRED WEIGHT BEING INDUCED INTO THE PIPE OR CONNECTED EQUIPMENT.

E. WHERE POSSIBLE, STEEL STRUCTURAL ATTACHMENTS SHALL BE BEAM CLAMPS. OTHER ATTACHMENTS SHALL BE AS SCHEDULED.

F. ALL RIGID HANGERS SHALL PROVIDE A MEANS OF VERTICAL ADJUSTMENT AFTER ERECTION.

G. HANGER RODS SHALL BE SUBJECT TO TENSILE LOADING ONLY. AT HANGER LOCATIONS WHERE LATERAL OR AXIAL MOVEMENT IS ANTICIPATED, SUITABLE SUPPORT SHALL BE PROVIDED TO ELIMINATE SWING AND ALLOW FOR EXPANSION.

H. WHERE HORIZONTAL PIPING MOVEMENTS ARE GREATER THAN ½ INCH, OR WHERE THE HANGER LOAD ANGULARITY FROM THE VERTICAL IS GREATER THAN 4 DEGREES FROM THE COLD TO HOT POSITION OF THE PIPE, THE HANGER ROD TO STRUCTURAL ATTACHMENT SHALL BE BY USE OF ANVIL FIG. 47 AND FIG. 299 OR THE HANGER ROD AND STRUCTURAL ATTACHMENTS SHALL BE OFFSET IN SUCH MANNER THAT THE ROD IS VERTICAL IN THE HOT POSITION.

I. CONTRACTOR TO FABRICATE AND PROVIDE ADDITIONAL STRUCTURAL SUPPORT AS REQUIRED TO PREVENT SWAY WHERE HANGER ROD LENGTHS EXCEED 48" IN LENGTH.

J. HANGERS SHALL BE DESIGNED SO THAT THEY CANNOT BECOME DISENGAGED BY MOVEMENTS OF THE SUPPORTED PIPE.

K. ALL PIPING AND EQUIPMENT SHALL BE BRACED AND SECURED TO PREVENT SWAY AND MOVEMENT IN ALL AXES.

L. HANGERS SHALL BE SPACED IN ACCORDANCE WITH ANSI B31.1.0

M. WHERE PRACTICAL, RISER PIPING SHALL BE SUPPORTED INDEPENDENTLY OF THE CONNECTED HORIZONTAL PIPING.

1. PIPE SUPPORT ATTACHMENTS TO THE RISER PIPING SHALL BE RISER CLAMP LUGS. WELDED ATTACHMENTS SHALL BE OF MATERIAL COMPARABLE TO THAT OF THE PIPE AND DESIGNED IN ACCORDANCE WITH ANSI B31.1 CODES.

N. SUPPORTS, GUIDES AND ANCHORS SHALL BE SO DESIGNED THAT EXCESSIVE HEAT WILL NOT BE TRANSMITTED TO THE BUILDING STEEL. THE TEMPERATURE OF SUPPORT PARTS SHALL BE BASED ON A TEMPERATURE GRADIENT OF 100 DEGREES F PER INCH DISTANCE FROM THE OUTSIDE SURFACE OF THE PIPE.

PART 2 - PRODUCTS

2.1 ACCEPTABLE MANUFACTURERS

A. ANVIL, ELCEN, MASON INDUSTRIES, ADVANCED THERMAL, FEE & MASON, PIPING SPECIALTIES, MIRO INDUSTRIES.

2.2 SHIELDS

A. INSULATION-INSERT MATERIAL FOR COLD PIPING: ASTM C552, TYPE II CELLULAR GLASS WITH 100-PSI MINIMUM COMPRESSIVE STRENGTH AND VAPOR BARRIER.

B. INSULATION-INSERT MATERIAL FOR HOT PIPING: WATER-REPELLENT-TREATED, ASTM C533, TYPE I CALCIUM SILICATE WITH 100-PSI MINIMUM COMPRESSIVE STRENGTH.

C. FOR TRAPEZE OR CLAMPED SYSTEMS: INSERT AND SHIELD SHALL COVER ENTIRE CIRCUMFERENCE OF PIPE.

D. FOR CLEVIS OR BAND HANGERS: INSERT AND SHIELD SHALL COVER LOWER 180 DEGREES OF PIPE.

E. INSERT LENGTH: EXTEND 2 INCHES BEYOND SHEET METAL SHIELD FOR PIPING OPERATING BELOW AMBIENT AIR TEMPERATURE.

F. SHIELDS FOR COPPER PIPE SHALL UTILIZE SHEET LEAD.

2.3 INSERTS

A. INSERTS: MALLEABLE IRON CASE OR GALVANIZED STEEL SHELL AND EXPANDER PLUG FOR THREADED CONNECTION WITH LATERAL ADJUSTMENT, TOP SLOT FOR REINFORCING RODS, LUGS FOR ATTACHING TO FORMS; SIZE INSERTS TO SUIT THREADED HANGER RODS.

2.4 METAL PIPE HANGERS AND SUPPORTS

A. CARBON-STEEL PIPE HANGERS AND SUPPORTS:

1. DESCRIPTION: MSS SP-58, TYPES 1 THROUGH 58, FACTORY-FABRICATED COMPONENTS.
2. GALVANIZED METALLIC COATINGS: PRE-GALVANIZED, HOT DIP GALVANIZED, OR ELECTRO-GALVANIZED.
3. NONMETALLIC COATINGS: PLASTIC COATED, OR EPOXY POWDER COATED.
4. PADDED HANGERS: HANGER WITH FIBERGLASS OR OTHER PIPE INSULATION PAD OR CUSHION TO SUPPORT BEARING SURFACE OF PIPING.
5. HANGER RODS: CONTINUOUS-THREAD ROD, NUTS, AND WASHER MADE OF CARBON STEEL.

B. COPPER PIPE AND TUBE HANGERS:

1. DESCRIPTION: MSS SP-58, TYPES 1 THROUGH 58, COPPER-PLATED STEEL, FACTORY-FABRICATED COMPONENTS.
2. HANGER RODS: CONTINUOUS-THREAD ROD, NUTS, AND WASHER MADE OF COPPER-PLATED STEEL.

2.5 TRAPEZE PIPE HANGERS

A. DESCRIPTION: MSS SP-58, TYPE 59, SHOP- OR FIELD-FABRICATED PIPE-SUPPORT ASSEMBLY MADE FROM STRUCTURAL CARBON-STEEL SHAPES WITH MSS SP-58 CARBON-STEEL HANGER RODS, NUTS, SADDLES, AND U-BOLTS.

2.6 METAL FRAMING SYSTEMS

A. MFMA MANUFACTURER METAL FRAMING SYSTEMS:

1. DESCRIPTION: SHOP- OR FIELD-FABRICATED, PIPE-SUPPORT ASSEMBLY MADE OF STEEL CHANNELS, ACCESSORIES, FITTINGS, AND OTHER COMPONENTS FOR SUPPORTING MULTIPLE PARALLEL PIPES.
2. STANDARD: COMPLY WITH MFMA-4 FACTORY-FABRICATED COMPONENTS FOR FIELD ASSEMBLY.
3. CHANNELS: CONTINUOUS SLOTTED CARBON-STEEL CHANNEL WITHIN TURNED LIPS.
4. CHANNEL WIDTH: SELECTED FOR APPLICABLE LOAD CRITERIA.
5. CHANNEL NUTS: FORMED OR STAMPED NUTS OR OTHER DEVICES DESIGNED TO FIT INTO CHANNEL SLOT AND, WHEN TIGHTENED, PREVENT SLIPPING ALONG CHANNEL.
6. HANGER RODS: CONTINUOUS-THREAD ROD, NUTS, AND WASHER MADE OF GALVANIZED STEEL.
7. METALLIC COATING: PRE-GALVANIZED G90 (Z275).

2.7 BEAM CLAMPS

1. BEAM CLAMPS SHALL HAVE MALLEABLE IRON JAWS, STEEL BOLT OR TIE ROD, NUTS, AND JAMB NUTS.
2. C-CLAMPS WILL NOT BE PERMITTED UNLESS RETAINER IS PROVIDED.

2.8 EQUIPMENT SUPPORTS

A. DESCRIPTION: WELDED, SHOP- OR FIELD-FABRICATED EQUIPMENT SUPPORT MADE FROM STRUCTURAL CARBON-STEEL SHAPES..

PART 3 - EXECUTION

3.1 INSERTS

A. PROVIDE INSERTS FOR SUSPENDING HANGERS FROM REINFORCED CONCRETE SLABS AND SIDES OF REINFORCED CONCRETE BEAMS.

B. WHERE CONCRETE SLABS FORM FINISHED CEILING, PROVIDE INSERTS TO BE FLUSH WITH SLAB SURFACE.

3.2 PIPE HANGERS AND SUPPORTS

A. COMPLY WITH MSS SP-58 FOR PIPE-HANGER SELECTIONS AND APPLICATIONS.

B. USE HANGERS AND SUPPORTS WITH GALVANIZED METALLIC COATINGS FOR PIPING AND EQUIPMENT THAT WILL NOT HAVE FIELD-APPLIED FINISH.

C. USE NONMETALLIC COATINGS ON ATTACHMENTS FOR ELECTROLYTIC PROTECTION WHERE ATTACHMENTS ARE IN DIRECT CONTACT WITH COPPER TUBING.

D. USE CARBON-STEEL PIPE HANGERS AND SUPPORTS AND METAL FRAMING SYSTEMS AND ATTACHMENTS FOR GENERAL SERVICE APPLICATIONS.

E. USE COPPER-PLATED PIPE HANGERS AND COPPER ATTACHMENTS FOR COPPER PIPING AND TUBING.

F. USE THERMAL-HANGER SHIELD INSERTS FOR INSULATED PIPING AND TUBING.

G. INSTALL HANGERS TO PROVIDE MINIMUM ½ INCH SPACE BETWEEN FINISHED COVERING AND ADJACENT WORK.

H. PLACE A HANGER WITHIN 12 INCHES OF EACH HORIZONTAL ELBOW.

I. PROVIDE HANGERS WITH 1-1/2-INCH MINIMUM VERTICAL ADJUSTMENT.

J. PROVIDE ADDITIONAL STRUCTURAL SUPPORT WHERE REQUIRED TO PREVENT PIPE MOVEMENT AND SWAY.

K. SUPPORT RISER PIPING INDEPENDENTLY OF CONNECTED HORIZONTAL PIPING.

L. SUPPORT PIPING AS FOLLOWS:

NOMINAL PIPE SIZESINGLE ROD DIAMETERTHICKNESS OF INSULATION SHIELDMAXIMUM SPACING FERROUS PIPINGCOPPER TUBINGHDPE PIPING3/4" & UNDER3/8"16 GAUGE6'5'2.5'1"3/8"16 GAUGE7'6'3'1 1/43/8"16 GAUGE8'8'4'1 ½3/8"16 GAUGE9'8'4'

SECTION 23 31 13 - DUCTWORK AND DUCTWORK INSULATION

PART 1 - GENERAL

1.1 WORK INCLUDED

A. LOW PRESSURE DUCTS, INSULATION, AND DUCT CLEANING

1.2 ACTION SUBMITTALS

A. SHOP DRAWINGS: FOR EACH: DUCTWORK, DUCTWORK INSULATIONS, DUCTWORK HANGERS.

PART 2 - PRODUCTS

2.1 ACCEPTABLE MANUFACTURERS

A. C&R SHEET METAL, DUCTMATE, DUCTSOX CORPORATION, EASTERN SHEET METAL, EURO-AIRE, FABRICAIR, FLEXMASTERUSA, KE FIBERTEC, LINDAB, NORDFAB, PRIHODA, TURNKEY OR HAMLIN.

2.2 MATERIALS

A. GENERAL: NON-COMBUSTIBLE OR CONFORMING TO REQUIREMENTS FOR CLASS 1 AIR DUCT MATERIALS, OR UL 181.

B. ALL DUCT MATERIAL AND COVERING SHALL HAVE A FLAME SPREAD RATING OF 24 OR LESS AND A SMOKE DEVELOPED RATING OF 50 OR LESS WHEN TESTED IN ACCORDANCE WITH ASTM E84.

C. STEEL DUCTS: ASTM A653/A653M GALVANIZED STEEL SHEET, LOCK FORMING QUALITY, HAVING ZINC COATING OF 1.25 OZ. PER SQ. FT. FOR EACH SIDE IN CONFORMANCE WITH ASTM G90.

D. DUCT SCHEDULE:

1. SUPPLY, RETURN, EXHAUST AND OUTSIDE AIR DUCTS CONNECTED TO FAN COIL UNITS, FURNACES, HEAT PUMPS, VARIABLE AIR VOLUME BOX (VAV BOX OUTLET TO GRILLE, REGISTER, DIFFUSER) AND TERMINAL UNITS:
    a. PRESSURE CLASS (LOW PRESSURE): POSITIVE 2-INCH WG.
    b. MINIMUM SMACNA SEAL CLASS: C.
    c. SMACNA LEAKAGE CLASS FOR RECTANGULAR: 16.
    d. SMACNA LEAKAGE CLASS FOR ROUND AND FLAT OVAL: 8.
2. SUPPLY DUCTS CONNECTED TO CONSTANT-VOLUME AND VARIABLE-VOLUME AIR-HANDLING UNITS (AIR HANDLING UNIT TO VAV BOX INLET):
    a. PRESSURE CLASS (MEDIUM PRESSURE): POSITIVE 3-INCH WG.
    b. MINIMUM SMACNA SEAL CLASS: B.
    c. SMACNA LEAKAGE CLASS FOR RECTANGULAR: 8.
    d. SMACNA LEAKAGE CLASS FOR ROUND AND FLAT OVAL: 4.
3. ALL OTHER DUCTS NOT LISTED ABOVE:
    a. PRESSURE CLASS (LOW PRESSURE): POSITIVE 2-INCH WG.
    b. MINIMUM SMACNA SEAL CLASS: C.
    c. SMACNA LEAKAGE CLASS FOR RECTANGULAR: 16.
    d. SMACNA LEAKAGE CLASS FOR ROUND AND FLAT OVAL: 8.

E. FLEXIBLE DUCTS: INTERLOCKING SPIRAL OF GALVANIZED STEEL, OR FABRIC SUPPORTED ON HELICALLY WOUND SPRING STEEL WIRE RATED TO 2 INCHES WG POSITIVE AND 1.5 INCHES WG NEGATIVE FOR LOW PRESSURE DUCTS AND 15 INCHES POSITIVE OR NEGATIVE FOR MEDIUM HIGH-PRESSURE DUCTS. FLEXIBLE DUCTS SHALL CONFORM TO UL 181. MAXIMUM LENGTH PER RUN SHALL BE 48".

F. INSULATED FLEXIBLE DUCT: FLEXIBLE DUCT WRAPPED WITH FLEXIBLE GLASS FIBER INSULATION, ENCLOSED BY SEAMLESS ALUMINUM PIGMENTED PLASTIC VAPOR BARRIER JACKET; MAXIMUM 0.23 K VALUE AT 75 DEGREES F. MAXIMUM LENGTH PER RUN SHALL BE 48".

G. STAINLESS STEEL DUCTS: ASTM A480/A480M, TYPE 304.

H. FASTENERS: RIVETS, BOLTS, OR SHEET METAL SCREWS.

I. SEALANT: NON-HARDENING, WATER RESISTANT, FIRE RESISTIVE, COMPATIBLE WITH MATING MATERIALS; LIQUID USED ALONG OR WITH TAPE, OR HEAVY MASTIC.

J. HANGER ROD: STEEL, GALVANIZED; THREADED BOTH ENDS, THREADED ONE END, OR CONTINUOUSLY THREADED. STAINLESS STEEL FOR STAINLESS STEEL DUCT.

Notice

The Architect/Engineer does not define the scope of individual trades, subcontractors, material suppliers, or vendors. Any sheet numbering system used which identifies disciplines is solely for the Architect/Engineer's convenience, and is not intended to define a subcontractor's scope of work. Information regarding individual trades, subcontractors, material suppliers, and vendors may be detailed, described and indicated at different locations throughout these documents. No consideration will be given to requests for change orders for failure to obtain and review the complete set of drawings and specifications when preparing bids, prices, and quotations.

TowerPinkster
ARCHITECTURE • ENGINEERING • INTERIORS

630 Walnut St.
Jeffersonville, IN 47130
812.282.9554 PHONE

242 East Kalamazoo Avenue, Suite 100
Kalamazoo, Michigan 49007-5828
269.343.6133 PHONE 269.343.6633 FAX

TOWERPINKSTER.COM

STATE OF KENTUCKY
MALLORY L. P. ANDERSON
36770
LICENSED PROFESSIONAL ENGINEER

ISSUED FOR
DATE

Revisions

PROJECT TITLE
2025
RENOVATIONS

OWNER
FIRST HARRISON
BANK

130 S. BUCKMAN ST.
SHEPHERDSVILLE, KY 40165

Drawn
Checked By

SHEET TITLE
MECHANICAL
SPECIFICATIONS

DATE

SHEET NUMBER
M-801

2.3 INSULATION

A. INTERNAL: GLASS FIBER; ASTM C1071, G21 AND G22 WITH AN NRC NOT LESS THAN .65, 1.5 LB./CU. FT. MINIMUM DENSITY; SMOOTH BLACK MATTED AIR SIDE SURFACE FOR MAXIMUM 5000 FPM AIR VELOCITY.

B. EXTERNAL (CHOOSE ONE OF THE FOLLOWING):

1. FLEXIBLE OR RIGID GLASS FIBER; ASTM C1290 AND C1136 ALL-SERVICE DUCT WRAP; K VALUE OF .27 AT 75 DEGREES F AND A MINIMUM INSTALLED R-VALUE OF R-6. PROVIDE WITH FOIL SCRIM FACING.

2. REFLECTIX (OR EQUAL) R-6.0 INSULATION HAVING TWO LAYERS OF ALUMINUM FOIL WITH POLYETHYLENE BONDED FOR STRENGTH, AND TWO INNER LAYERS OF INSULATED BUBBLES; 5/16” THICK; 1.25 OZ./SQ. FT. FLAME AND SMOKE 25/50.

C. INSULATION MATERIAL AND JACKETS SHALL HAVE A FLAME SPREAD RATING OF 25 OR LESS AND A SMOKE DEVELOPED RATING OF 50 OR LESS WHEN TESTED IN ACCORDANCE WITH ASTM E84.

D. ADHESIVES: WATERPROOF FIRE-RETARDANT TAPE.

E. LAGGING ADHESIVES: FIRE RESISTIVE TO ASTM E84, NFPA 255, UL723.

F. IMPALE ANCHORS: GALVANIZED STEEL, 12- GAGE, SPOT WELDED OR SELF-ADHESIVE PAD. NO ANCHORS SHALL PENETRATE DUCT WALLS.

G. JOINT TAPE: GLASS FIBER CLOTH, OPEN MESH.

H. TIE WIRE: ANNEALED STEEL, 16-GAGE.

2.4 DUCT HANGERS

A. ALL DUCT HANGERS IN DIRECT CONTACT WITH GALVANIZED DUCT SHALL BE GALVANIZED STEEL.

B. ALL DUCT HANGERS IN DIRECT CONTACT WITH STAINLESS STEEL DUCTS SHALL BE STAINLESS STEEL.

PART 3 - EXECUTION

3.1 LOW PRESSURE DUCTWORK

A. FABRICATE AND SUPPORT IN COMPLETE ACCORDANCE WITH SMACNA HVAC DUCT CONSTRUCTION STANDARDS, METAL AND FLEXIBLE AND ASHRAE HANDBOOKS LATEST EDITIONS, EXCEPT AS INDICATED. PROVIDE DUCT MATERIAL, GAGES, REINFORCING, AND SEALING FOR OPERATION PRESSURES INDICATED.

B. SIZE ROUND DUCTS INSTALLED IN PLACE OF RECTANGULAR DUCTS IN ACCORDANCE WITH ASHRAE TABLE OF EQUIVALENT RECTANGULAR AND ROUND DUCTS. NO VARIATION OF DUCT CONFIGURATION OR SIZES PERMITTED EXCEPT BY WRITTEN PERMISSION.

C. CONSTRUCT T'S, BENDS, AND ELBOWS WITH A RADIUS OF NOT LESS THAN 1-1/2 TIMES WIDTH OF DUCT ON CENTERLINE. WHERE NOT POSSIBLE AND WHERE RECTANGULAR ELBOWS ARE USED, PROVIDE TURNING VANES. WHERE ACOUSTICAL LINING IS INDICATED, PROVIDE TURNING VANES OF PERFORATED METAL WITH GLASS FIBER INSULATION FILL.

D. INCREASE DUCT SIZES GRADUALLY, NOT EXCEEDING 15 DEGREES DIVERGENCE WHEREVER POSSIBLE. DIVERGENCE UPSTREAM OF EQUIPMENT SHALL NOT EXCEED 30 DEGREES; CONVERGENCE DOWNSTREAM SHALL NOT EXCEED 30 DEGREES.

E. PROVIDE EASEMENTS WHERE LOW PRESSURE DUCTWORK CONFLICTS WITH PIPING AND STRUCTURE. WHERE EASEMENTS EXCEED 10 PERCENT DUCT AREA, SPLIT INTO TWO DUCTS MAINTAINING ORIGINAL DUCT AREA.

F. CONNECT FLEXIBLE DUCTS TO METAL DUCTS WITH DRAW BANDS OR ADHESIVE PLUS SHEET METAL SCREWS.

G. USE CRIMP JOINTS WITH OR WITHOUT BEAD FOR JOINING ROUND DUCT SIZES 8 INCH AND SMALLER WITH CRIMP IN DIRECTION OF AIR FLOW.

3.2 DUCTWORK INSTALLATION

A. PROVIDE ENGINEERED OPENINGS IN DUCTWORK WHERE REQUIRED TO ACCOMMODATE THERMOMETERS AND CONTROLLERS. PROVIDE PILOT TUBE OPENINGS WHERE REQUIRED FOR TESTING OF SYSTEMS, COMPLETE WITH METAL CAN WITH SPRING DEVICE OR SCREW TO ENSURE AGAINST AIR LEAKAGE. WHERE OPENINGS ARE PROVIDED IN INSULATED DUCTWORK, INSTALL INSULATION MATERIAL INSIDE A METAL RING AND MAINTAIN VAPOR BARRIER WHERE APPLICABLE.

B. LOCATE DUCTS WITH SUFFICIENT SPACE AROUND EQUIPMENT TO ALLOW NORMAL OPERATING AND MAINTENANCE ACTIVITIES.

C. PROVIDE RESIDUE TRAPS IN KITCHEN HOOD EXHAUST DUCTS AT BASE OF VERTICAL RISERS WITH PROVISIONS FOR CLEANOUT. USE STAINLESS STEEL FOR DUCTWORK EXPOSED TO VIEW AND STAINLESS STEEL OR GALVANIZED STEEL FOR DUCTS WHERE CONCEALED.

D. DURING CONSTRUCTION, PROVIDE TEMPORARY CLOSURES OF METAL OR TAPED POLYETHYLENE ON OPEN DUCTWORK TO PREVENT CONSTRUCTION DUST FROM ENTERING DUCTWORK SYSTEM.

E. CLEAN DUCT SYSTEM AND FORCE AIR AT HIGH VELOCITY THROUGH DUCT TO REMOVE ACCUMULATED DUST. TO OBTAIN SUFFICIENT AIR, CLEAN HALF THE SYSTEM AT A TIME. PROTECT EQUIPMENT WHICH MAY BE HARMED BY EXCESSIVE DIRT WITH TEMPORARY FILTERS, OR BYPASS DURING CLEANING.

F. SPACE BETWEEN DUCT AND FLOOR OR MASONRY WALL OPENINGS SHALL BE SEALED WITH FIRE RATED CAULK.

G. VERIFY ALL FIELD CONDITIONS BEFORE FABRICATION OF DUCTWORK TO AVOID INSTALLATION CONFLICTS. NOTIFY ENGINEER OF ANY CONFLICT AREAS.

H. DO NOT CHANGE THE DESIGNED PATH OF DUCTWORK, ADD EXCESSIVE TURNS OR OFFSETS, OR CHANGE DUCT SIZES WITHOUT FIRST CONSULTING THE ENGINEER.

3.3 INSULATION INSTALLATION

A. INSTALL MATERIALS IN ACCORDANCE WITH MANUFACTURER'S INSTRUCTIONS.

B. EXTERIOR INSULATION APPLICATION

1. SECURE INSULATION WITH VAPOR BARRIER WITH WIRES AND SEAL JACKET JOINTS WITH VAPOR BARRIER ADHESIVE OR TAPE TO MATCH JACKET.

2. SEAL VAPOR BARRIER PENETRATIONS BY MECHANICAL FASTENERS WITH VAPOR BARRIER ADHESIVE.

3. CONTINUE INSULATION WITH VAPOR BARRIER THOUGH PENETRATIONS.

C. INSULATION SCHEDULE

1. SUPPLY AND OUTSIDE AIR DUCTWORK SHALL BE INSULATED WITH EXTERNAL INSULATION AS NOTED BELOW.

2. EXTERNALLY INSULATED DUCTWORK SHALL BE INSULATED USING ONE OF THE FOLLOWING METHODS:

a. DUCTWORK SHALL BE EXTERNALLY INSULATED WITH REFLECTIX (OR EQUAL) R-6.0 INSULATION HAVING TWO LAYERS OF ALUMINUM FOIL WITH POLYETHYLENE BONDED FOR STRENGTH, AND TWO INNER LAYERS OF INSULATED BUBBLES; 5/16” THICK; 1.25 OZ./SQ. FT. FLAME AND SMOKE 25/50.

a) DUCTWORK MAY ALSO BE INSULATED WITH FIBERGLASS INSULATION, MAINTAINING THE INSULATION VALUE OF R-6.0, IN LIEU OF REFLECTIX INSULATION.

3. INSULATION MUST BE INSTALLED IN STRICT ACCORDANCE WITH INSULATION MANUFACTURER'S REQUIREMENTS. PROVIDE SPACERS, PINS, BANDS AND ADHESIVE AS REQUIRED. SPECIAL CARE MUST BE TAKEN ON LARGE DUCTWORK TO PREVENT SAGGING OF INSULATION AWAY FROM DUCTWORK.

4. INTERIOR EXHAUST DUCT SHALL NOT REQUIRE INSULATION

5. COMBUSTION AIR DUCT SHALL HAVE 1½ INCH EXTERNAL INSULATION.

6. WHERE DUCT IS SCHEDULED TO BE INSULATED (EITHER EXTERNALLY OR INTERNALLY) HEREIN AND SHOWN TO BE ROUTED IN AN AREA THAT WILL BE EXPOSED BASED ON ARCHITECTURAL DRAWINGS, THE CONTRACTOR SHALL PROVIDE DOUBLE-WALL DUCT CONFORMING WITH THE SPECIFICATIONS PROVIDED HEREIN.

7. ALL DUCTWORK INSULATION MUST CONFORM TO THE MINIMUM REQUIREMENTS OF ASHRAE 90.1 (CURRENT EDITION) AND INTERNATIONAL ENERGY CONSERVATION CODE (CURRENT EDITION) UNLESS OTHERWISE SPECIFIED IN THIS SECTION.

3.4 HANGERS

A. DUCT HANGERS MAY BE DIRECTLY ATTACHED TO DUCTS. DUCTS SHALL BE HUNG BY ANGLES OR STRAPS AS LISTED IN THE FOLLOWING SCHEDULE. RODS, STRAPS OR ANGLES MAY BE USED IN TRAPEZE HANGERS. HANGERS SHALL BE IN ACCORDANCE WITH THE FOLLOWING SCHEDULE, EXCEPT THAT THERE SHALL BE NO LESS THAN ONE SET OF HANGERS FOR EACH SECTION OF DUCTWORK. WHERE ELBOWS OR TEES ARE INSTALLED FOR CHANGES IN DIRECTION, HANGERS SHALL BE PROVIDED. NO DUCTWORK SHALL REST ON THE BUILDING STRUCTURAL SYSTEM. NO DUCTWORK SHALL BE SUPPORTED BY SUSPENDED CEILING SYSTEMS. ALL DUCTWORK MUST BE INDEPENDENTLY SUPPORTED FROM BUILDING STRUCTURAL SYSTEM.

B. ALL HANGERS SHALL BE SUFFICIENTLY ACROSS-BRACED TO ELIMINATE, IN THE OPINION OF THE ARCHITECT, EXCESSIVE SWAY. WHEREVER DUCTWORK CONTAINS FILTER SECTIONS, COILS, FANS OR OTHER HEAVY EQUIPMENT (EXCLUDING REGISTERS, GRILLES, DIFFUSERS, SPLITTER DAMPERS, ETC.) SUCH EQUIPMENT SHALL BE HUNG INDEPENDENTLY OF THE DUCTWORK, WITH RODS OR ANGLES OF SIZES ADEQUATE TO SUPPORT THE LOAD.

3.5 TESTING

A. THE TEST APPARATUS SHALL CONSIST OF:

1. A SOURCE OF HIGH PRESSURE AIR - A PORTABLE ROTARY BLOWER OR A TANK TYPE VACUUM CLEANER.

2. A FLOW MEASURING DEVICE ORIFICE ASSEMBLY CONSISTING OF STRAIGHTENING VANES AND AN ORIFICE PLATE MOUNTED IN A STRAIGHT TUBE WITH PROPERLY LOCATED PRESSURE TAPS. EACH ORIFICE ASSEMBLY IS ACCURATELY CALIBRATED WITH ITS OWN CALIBRATION CURVE. PRESSURE AND FLOW READINGS SHALL BE TAKEN WITH U-TUBE MANOMETERS OR EQUIVALENT GAUGE.

B. TEST PROCEDURES

1. CLOSE OFF AND SEAL ALL OPENINGS IN THE DUCT SECTION TO BE TESTED. CONNECT THE TEST APPARATUS TO THE DUCT BY MEANS OF A SECTION OF FLEXIBLE DUCT.

2. START THE BLOWER WITH ITS CONTROL DAMPER CLOSED.

3. GRADUALLY OPEN THE INLET DAMPER UNTIL THE DUCT PRESSURE REACHES 25 PERCENT IN EXCESS OF DESIGNED DUCT OPERATING PRESSURE INDICATED.

4. SURVEY ALL JOINTS FOR AUDIBLE LEAKS. REPAIR EACH LEAK AFTER SHUTTING DOWN BLOWER. DO NOT APPLY A RETEST UNTIL SEALANTS HAVE SET.

5. IF MEASURED LEAKAGE EXCEEDS 1 PERCENT OF TOTAL DESIGN FLOW, LOCATE AND SEAL LEAKAGE.

6. AFTER ALL AUDIBLE LEAKS HAVE BEEN SEALED, THE REMAINING LEAKAGE SHOULD BE MEASURED WITH THE ORIFICE SECTION OF THE TEST APPARATUS AS FOLLOWS:

a. START BLOWER AND OPEN DAMPER UNTIL PRESSURE IN DUCT REACHES 25% IN EXCESS OF DESIGNED DUCT OPERATING PRESSURE INDICATED.

b. READ THE PRESSURE DIFFERENTIAL ACROSS THE ORIFICE ON MANOMETER TO DETERMINE LEAKAGE.

c. TOTAL ALLOWABLE LEAKAGE SHOULD NOT EXCEED ONE (1) PERCENT OF THE TOTAL SYSTEM DESIGN AIR FLOW RATE. WHEN PARTIAL SECTIONS OF THE DUCT SYSTEM ARE TESTED, THE SUMMATION OF THE LEAKAGE FOR ALL SECTIONS SHALL NOT EXCEED THE TOTAL ALLOWABLE LEAKAGE.

7. PROVIDE DUCT LEAK TESTING REPORT.

ECTION 23 33 00 - DUCTWORK ACCESSORIES

PART 1 - GENERAL

1.1 WORK INCLUDED

VOLUME CONTROL DAMPERS, BACKDRAFT DAMPERS, AIR TURNING DEVICES, FLEXIBLE DUCT CONNECTORS,

1.2 ACTION SUBMITTALS

SHOP DRAWINGS: FOR EACH TYPE OF PRODUCT SPECIFIED.

PART 2 - PRODUCTS

2.1 VOLUME CONTROL DAMPERS

A. ACCEPTABLE MANUFACTURER: UNITED ENERTECH, AIR BALANCE, AMERICAN WARMING, ARROW, CESCO, CREATIVE METALS, NAILOR, RUSKIN, VENT PRODUCTS, AND WHIZ AIR.

B. FABRICATE IN ACCORDANCE WITH SMACNA LOW PRESSURE DUCT CONSTRUCTION STANDARDS, AND AS INDICATED.

C. FABRICATE SPLITTER DAMPERS OF MATERIAL SAME GAGE AS DUCT TO 24 INCHES SIZE IN EITHER DIRECTION AND TWO GAGES HEAVER FOR SIZES OVER 24 INCHES.

D. FABRICATE SPLITTER DAMPERS TO STREAMLINE SHAPE. SECURE BLADE WITH CONTINUOUS HINGE OR ROD. OPERATE WITH MINIMUM 1/4-INCH DIAMETER ROD IN SELF ALIGNING, UNIVERSAL JOINT ACTION FLANGED BUSHING WITH SET SCREW.

E. FABRICATE SINGLE BLADE DAMPERS FOR DUCT SIZES TO 12 INCH.

F. FABRICATE MULTI-BLADE DAMPER OF OPPOSED BLADE PATTERN WITH MAXIMUM BLADE SIZES 12 X 72 INCHES. ASSEMBLE CENTER AND EDGE CRIMPED BLADES IN PRIME COATED OR GALVANIZED CHANNEL FRAME WITH SUITABLE HARDWARE.

G. EXCEPT IN ROUND DUCTWORK 12 INCHES AND SMALLER, PROVIDE END BEARINGS. ON MULTIPLE BLADE DAMPERS, PROVIDE OIL-IMPREGNATED NYLON OR SINTERED BRONZE BEARINGS.

H. PROVIDE LOCKING, INDICATING QUADRANT REGULATORS ON SINGLE AND MULTI-BLADE DAMPERS. WHERE ROD LENGTHS EXCEED 30 INCHES PROVIDE REGULATOR AT BOTH ENDS.

I. WHERE DUCTWORK IS REQUIRED TO HAVE EXTERNAL INSULATION WRAP APPLIED, DAMPERS SHALL BE PROVIDED WITH 2” STAND-OFF (MINIMUM) TO ALLOW FULL RANGE OF MOTION OF DAMPER HANDLE WITHOUT DAMAGE TO SURROUNDING INSULATION.

2.3 BACKDRAFT DAMPERS

A. ACCEPTABLE MANUFACTURERS

1. UNITED ENERTECH, AIR BALANCE, ARROW, CESCO, NAILOR, RUSKIN, AND VENT PRODUCTS.

B. GRAVITY BACKDRAFT DAMPERS, SIZE 18 X 18 INCHES OR SMALLER, FURNISHED WITH AIR MOVING EQUIPMENT, MAY BE AIR MOVING EQUIPMENT MANUFACTURERS STANDARD CONSTRUCTION.

C. FABRICATE MULTI-BLADE, PARALLEL ACTION GRAVITY BALANCED BACKDRAFT DAMPERS OF 16 GAGE GALVANIZED STEEL, WITH CENTER PIVOTED BLADES OF MAXIMUM 6-INCH WIDTH, WITH FELT OR FLEXIBLE VINYL SEALED EDGES, LINKED TOGETHER IN RATTLE-FREE MANNER WITH 90 DEGREE STOP, STEEL BALL BEARINGS, AND PLATED STEEL PIVOT PIN; ADJUSTMENT DEVICE TO PERMIT SETTING FOR VARYING DIFFERENTIAL STATIC PRESSURE.

2.4 AIR TURNING DEVICES

A. ACCEPTABLE MANUFACTURERS

1. DUCTMATE INDUSTRIES, DURO-DYNE, METALAIRE, SEMCO, WARD INDUSTRIES.

B. MULTI-BLADE DEVICE WITH BLADES ALIGNED IN SHORT DIMENSION; STEEL OR ALUMINUM CONSTRUCTION; WITH INDIVIDUALLY ADJUSTABLE BLADES, MOUNTING STRAPS. PROVIDE IN ALL SQUARE TURNS.

2.5 FLEXIBLE DUCT CONNECTORS

A. ACCEPTABLE MANUFACTURERS

1. DUCTMATE INDUSTRIES, DURO-DYNE, VENT FABRICS, WARD INDUSTRIES.

B. FABRICATE IN ACCORDANCE WITH SMACNA LOW PRESSURE DUCT CONSTRUCTION STANDARDS, AND AS INDICATED.

C. UL LISTED FIRE-RETARDANT NEOPRENE COATED WOVEN GLASS FIBER FABRIC TO NFPA 90A, MINIMUM DENSITY 20 OZ PER SQUARE YARD, APPROXIMATELY 6 INCHES WIDE, CRIMPED INTO METAL EDGING STRIP.

PART 3 - EXECUTION

3.1 INSTALLATION

A. INSTALL ACCESSORIES IN ACCORDANCE WITH MANUFACTURER'S INSTRUCTIONS.

B. PROVIDE BALANCING DAMPERS AT POINTS ON LOW PRESSURE SUPPLY, RETURN, AND EXHAUST SYSTEMS WHERE BRANCHES ARE TAKEN FROM LARGER DUCTS AS REQUIRED FOR AIR BALANCING. USE SPLITTER DAMPERS WHERE REQUIRED.

C. PROVIDE BACKDRAFT DAMPERS ON EXHAUST FANS OR EXHAUST DUCTS NEAREST TO OUTSIDE AND WHERE INDICATED.

D. PROVIDE FLEXIBLE CONNECTIONS IMMEDIATELY ADJACENT TO EQUIPMENT IN DUCTS ASSOCIATED WITH FANS AND MOTORIZED EQUIPMENT.

SECTION 23 34 23 - POWER VENTILATORS

PART 1 - GENERAL

1.1 WORK INCLUDED

A. CEILING EXHAUST FANS

1.2 ACTION SUBMITTALS

A. SHOP DRAWINGS: FOR EACH TYPE OF PRODUCT.

PART 2 - PRODUCTS

2.1 ACCEPTABLE MANUFACTURERS

A. MANUFACTURERS: CARNES COMPANY, GREENHECK FAN CORPORATION, LOREN COOK COMPANY.

2.2 GENERAL

A. PROVIDE ALL FANS WITH DISCONNECT.

B. PROVIDE ALL FANS WITH MOTOR STARTERS. SEE SECTION 230100 FOR DETAILS.

C. INTEGRAL PHASE RELAY SHALL BE PROVIDED AS A PART OF ALL THREE PHASE MOTOR STARTERS. RELAY SHALL SHUT MOTOR DOWN ON PHASE LOSS OR PHASE UNBALANCE AND AUTOMATICALLY RESET WHEN NORMAL PHASING IS RESTORED. PHASE FAILURE RELAY SHALL HAVE ADJUSTABLE RESTART TIME CAPABILITIES. MECHANICAL CONTRACTOR SHALL COORDINATE STAGGERED RESTART TIMES AS REQUIRED.

D. SEE DRAWINGS OR SPECIFICATION SECTION 230900 - INSTRUMENTATION AND CONTROLS FOR HVAC FOR CONTROL OF FANS.

2.3 CEILING EXHAUST FANS

A. CENTRIFUGAL FAN UNIT: V-BELT OR DIRECT DRIVE AS SPECIFIED, WITH GALVANIZED STEEL HOUSING LINED WITH 1/2-INCH ACOUSTIC INSULATION RESILIENT MOUNTED MOTOR, GRAVITY BACKDRAFT DAMPER IN DISCHARGE.

B. DISCONNECT SWITCH: FACTORY WIRED, NON-FUSIBLE, IN HOUSING FOR THERMAL OVERLOAD PROTECTED MOTOR AND WALL MOUNTED MULTIPLE SPEED SWITCH/SOLID STATE SPEED CONTROLLER.

C. GRILLE: MOLDED WHITE PLASTIC OR ALUMINUM WITH BAKED WHITE ENAMEL FINISH.

D. SHEAVES: CAST IRON OR STEEL, DYNAMICALLY BALANCED, BORED TO FIT SHAFTS AND KEYED, VARIABLE AND ADJUSTABLE PITCH MOTOR SHEAVES SELECTED SO REQUIRED RPM IS OBTAINED WITH SHEAVES SET AT MID-POSITION, FAN SHAFT WITH SELF-ALIGNING PRE-LUBRICATED BALL BEARINGS.

PART 3 - EXECUTION

3.1 INSTALLATION

A. INSTALL IN ACCORDANCE WITH MANUFACTURER'S INSTRUCTIONS.

B. INSTALL EQUIPMENT IN A MANNER TO PROVIDE REQUIRED CLEARANCES FOR PROPER OPERATION AND MAINTENANCE.

SECTION 23 37 13 - AIR DISTRIBUTION DEVICES

PART 1- GENERAL

1.1 WORK INCLUDED

A. DIFFUSERS, REGISTERS/GRILLES, LOUVERS

1.2 ACTION SUBMITTALS

A. SHOP DRAWINGS: FOR EACH TYPE OF PRODUCT.

PART 2 - PRODUCTS

2.1 ACCEPTABLE MANUFACTURERS

A. MANUFACTURER LISTED IN SCHEDULE IS FOR DESIGN SELECTION ONLY.

B. REGISTERS, GRILLES, AND DIFFUSERS: PRICE, NAILOR, TITUS

C. LOUVERS: GREENHECK, RUSKIN

2.2 RECTANGULAR CEILING DIFFUSERS

A. SQUARE, STAMPED, MULTICORE TYPE DIFFUSER TO DISCHARGE AIR IN FIXED 360-DEGREE PATTERN, OR ADJUSTABLE PATTERN AS SPECIFIED.

B. PROVIDE FOR SURFACE MOUNT AND INVERTED T-BAR WHERE SHOWN. IN PLASTER CEILINGS, PROVIDE PLASTER FRAME AND CEILING FRAME.

C. FABRICATE OF ALUMINUM WITH BAKED ENAMEL FINISH.

D. PROVIDE RADIAL OPPOSED BLADES DAMPER ADJUSTABLE FROM DIFFUSER FACE FOR SURFACE MOUNTED UNIT WHERE SPECIFIED.

2.3 CEILING GRID CORE EXHAUST AND RETURN REGISTERS/GRILLES

A. FIXED GRILLES OF 1/2 X 1/2 X 1-INCH LOUVERS.

B. FABRICATE MARGIN FRAME WITH COUNTERSUNK SCREW MOUNTING OR LAY-IN FRAME FOR SUSPENDED GRID CEILINGS AS SHOWN IN SCHEDULE ON DRAWINGS.

C. FABRICATE OF ALUMINUM WITH FACTORY CLEAR LACQUER FINISH.

D. WHERE SCHEDULED PROVIDE INTEGRAL, GANG-OPERATED OPPOSED BLADE DAMPERS WITH REMOVABLE KEY OPERATOR, OPERABLE FROM FACE.

E. ALL LOUVER-FACED GRILLES SHALL BE PROVIDED WITH PATTERN CONTROLLER BLADES UNLESS SCHEDULED OTHERWISE ON THE DRAWINGS.

2.4 LOUVERS

A. PROVIDE LOUVERS WITH BLADES ON 37.5- OR 45-DEGREE SLOPE, HEAVY CHANNEL FRAME, BIRD SCREEN WITH ½ INCH SQUARE MESH FOR EXHAUST AND 3/4 INCH FOR INTAKE.

B. FABRICATE OF EXTRUDED ALUMINUM, WELDED ASSEMBLY WITH FACTORY BAKE-ENAMEL FINISH.

C. FURNISH WITH REQUIRED FLANGE TO MATCH INSTALLATION REQUIRED.

PART 3 - EXECUTION

3.1 INSTALLATION

A. FURNISH AND INSTALL WHERE SHOWN ON DRAWINGS ALL REGISTERS, GRILLES, DIFFUSERS AND LOUVERS IN ACCORDANCE WITH THE TABULATION IN THE SCHEDULE ON DRAWINGS.

B. PROVIDE ACCESSORIES AND MODIFICATIONS AS INDICATED IN SCHEDULE NOTES.

C. INSTALL ITEMS IN ACCORDANCE WITH MANUFACTURER'S INSTRUCTIONS.

D. INSTALL IN LOCATIONS AS SHOWN ON DRAWINGS. ITEMS HAVE BEEN LOCATED AS SHOWN TO PROVIDE MAXIMUM PERFORMANCE. COORDINATE WITH ARCHITECTURAL FEATURES AND NOTIFY ARCHITECT/ENGINEER OF ANY CONFLICTS.

E. INSTALL DIFFUSERS TO DUCTWORK WITH AIR TIGHT CONNECTION.

F. PROVIDE ACCESSIBLE BALANCING DAMPERS ON DUCT TAKE-OFF TO DIFFUSERS, AND GRILLES AND REGISTERS, REGARDLESS OF WHETHER DAMPERS ARE SPECIFIED AS PART OF THE DIFFUSER, OR GRILLE AND REGISTER.

SECTION 23 54 16.13 - GAS-FIRED FURNACES

PART 1- GENERAL

1.1 SUMMARY

A. SECTION INCLUDES:

1. GAS-FIRED, NONCONDENSING CONDENSING FURNACES AND ACCESSORIES COMPLETE WITH CONTROLS, AIR FILTERS.

1.2 ACTION SUBMITTALS

A. SHOP DRAWINGS: FOR EACH TYPE OF PRODUCT.

1.3 WARRANTY

A. SPECIAL WARRANTY: MANUFACTURER AGREES TO REPAIR OR REPLACE THE FOLLOWING COMPONENTS OF FURNACES THAT FAIL IN MATERIALS OR WORKMANSHIP WITHIN SPECIFIED WARRANTY PERIOD:

1. WARRANTY PERIOD, COMMENCING ON DATE OF SUBSTANTIAL COMPLETION:

a. FURNACE HEAT EXCHANGER: 20 YEARS.

b. INTEGRATED IGNITION AND BLOWER CONTROL CIRCUIT BOARD: FIVE YEARS.

c. DRAFT-INDUCER MOTOR: FIVE YEARS.

d. REFRIGERATION COMPRESSORS: 5 YEARS.

e. EVAPORATOR AND CONDENSER COILS: FIVE YEARS.

PART 2 - PRODUCTS

2.1 ACCEPTABLE MANUFACTURERS

A. DAIKIN, AAON, JCI, TRANE, CARRIER, FRASER JOHNSTON, BRYANT

2.2 GAS-FIRED FURNACES, CONDENSING

A. CABINET: STEEL.

1. CABINET INTERIOR AROUND HEAT EXCHANGER SHALL BE FACTORY-INSTALLED INSULATION.

2. LIFT-OUT PANELS SHALL EXPOSE BURNERS AND ALL OTHER ITEMS REQUIRING ACCESS FOR MAINTENANCE.

3. FACTORY PAINT EXTERNAL CABINETS IN MANUFACTURER'S STANDARD COLOR.

4. AIRSTREAM SURFACES: SURFACES IN CONTACT WITH THE AIRSTREAM SHALL COMPLY WITH REQUIREMENTS IN ASHRAE 62.1.

B. FAN: CENTRIFUGAL, FACTORY BALANCED, RESILIENT MOUNTED, DIRECT DRIVE.

1. SPECIAL MOTOR FEATURES: MULTI-TAPPED, MULTISPEED WITH INTERNAL THERMAL PROTECTION AND PERMANENT LUBRICATION.

2. SPECIAL MOTOR FEATURES: ELECTRONICALLY CONTROLLED MOTOR (ECM) CONTROLLED BY INTEGRATED FURNACE/BLOWER CONTROL.

C. TYPE OF GAS: NATURAL.

D. HEAT EXCHANGER:

1. PRIMARY: STAINLESS STEEL.

2. SECONDARY: STAINLESS STEEL.

E. BURNER:

1. GAS VALVE: 100 PERCENT SAFETY MODULATING MAIN GAS VALVE, MAIN SHUTOFF VALVE, PRESSURE REGULATOR, SAFETY PILOT WITH ELECTRONIC FLAME SENSOR, LIMIT CONTROL, TRANSFORMER, AND COMBINATION IGNITION/FAN TIMER CONTROL BOARD.

2. IGNITION: ELECTRIC PILOT IGNITION, WITH HOT-SURFACE IGNITER OR ELECTRIC SPARK IGNITION.

F. GAS-BURNER SAFETY CONTROLS:

1. ELECTRONIC FLAME SENSOR: PREVENTS GAS VALVE FROM OPENING UNTIL PILOT FLAME IS PROVEN; STOPS GAS FLOW ON IGNITION FAILURE.

2. FLAME ROLLOUT SWITCH: INSTALLED ON BURNER BOX; PREVENTS BURNER OPERATION.

3. LIMIT CONTROL: FIXED STOP AT MAXIMUM PERMISSIBLE SETTING; DE-ENERGIZES BURNER ON EXCESSIVE BONNET TEMPERATURE; AUTOMATIC RESET.

G. COMBUSTION-AIR INDUCER: CENTRIFUGAL FAN WITH THERMALLY PROTECTED MOTOR AND SLEEVE BEARINGS PRE-PURGES HEAT EXCHANGER AND VENTS COMBUSTION PRODUCTS; PRESSURE SWITCH PREVENTS FURNACE OPERATION IF COMBUSTION-AIR INLET OR FLUE OUTLET IS BLOCKED.

H. FURNACE CONTROLS: SOLID-STATE BOARD INTEGRATES IGNITION, HEAT, COOLING, AND FAN SPEEDS; ADJUSTABLE FAN-ON AND FAN-OFF TIMING; TERMINALS FOR CONNECTION TO ACCESSORIES.

I. ACCESSORIES:

1. COMBINATION COMBUSTION-AIR INTAKE AND VENT: PVC PLASTIC FITTING TO COMBINE COMBUSTION-AIR INLET AND VENT THROUGH OUTSIDE WALL OR ROOF AS SPECIFIED.

2. CPVC PLASTIC VENT MATERIALS: SCHEDULE 40, COMPLYING WITH ASTM F 441/F 441M.

3. PVC PLASTIC VENT MATERIALS: SCHEDULE 40, COMPLYING WITH ASTM D 1785.

2.3 THERMOSTATS

A. CONTROLS SHALL COMPLY WITH REQUIREMENTS IN ASHRAE/IES 90.1, "CONTROLS."

B. SOLID-STATE THERMOSTAT: WALL-MOUNTED, PROGRAMMABLE, MICROPROCESSOR-BASED UNIT WITH AUTOMATIC SWITCHING FROM HEATING TO COOLING, PREFERENTIAL RATE CONTROL, SEVEN-DAY PROGRAMMABILITY WITH MINIMUM OF FOUR TEMPERATURE PRESETS PER DAY AND BATTERY BACKUP PROTECTION AGAINST POWER FAILURE FOR PROGRAM SETTINGS.

2.4 AIR FILTRATION SECTION

A. GENERAL REQUIREMENTS FOR AIR FILTRATION SECTION:

1. COMPLY WITH NFPA 90A.

2. MINIMUM MERV ACCORDING TO ASHRAE 52.2.

3. FILTER-HOLDING FRAMES: ARRANGED FOR FLAT OR ANGULAR ORIENTATION, WITH ACCESS DOORS ON BOTH SIDES OF UNIT. FILTERS SHALL BE REMOVABLE FROM ONE SIDE OR LIFTED OUT FROM ACCESS PLENUM.

B. DISPOSABLE PANEL FILTERS:

1. FACTORY-FABRICATED, VISCOUS-COATED, FLAT-PANEL TYPE.

2. THICKNESS: 2 INCH.

3. MEDIA: INTERLACED GLASS FIBERS SPRAYED WITH NONFLAMMABLE ADHESIVE AND ANTIMICROBIAL AGENT.

PART 3 - EXECUTION

3.1 INSTALLATION

A. INSTALL GAS-FIRED FURNACES AND ASSOCIATED FUEL AND VENT FEATURES AND SYSTEMS ACCORDING TO NFPA 54.

B. BASE-MOUNTED UNITS: SECURE UNITS TO SUBSTRATE. PROVIDE OPTIONAL BOTTOM CLOSURE BASE IF REQUIRED BY INSTALLATION CONDITIONS. ANCHOR FURNACE TO SUBSTRATE TO RESIST CODE-REQUIRED SEISMIC ACCELERATION.

SECTION 23 81 26 - SPLIT SYSTEM AIR CONDITIONERS

PART 1- GENERAL

1.1 SUMMARY

A. SECTION INCLUDES SPLIT-SYSTEM AIR-CONDITIONING UNITS CONSISTING OF SEPARATE EVAPORATOR-FAN AND COMPRESSOR-CONDENSER COMPONENTS AND REFRIGERANT PIPING AND CONTROLS.

1.2 ACTION SUBMITTALS

A. SHOP DRAWINGS: FOR EACH TYPE OF PRODUCT.

1.3 WARRANTY

A. SPECIAL WARRANTY FROM SUB-CONTRACTOR: MANUFACTURER'S STANDARD FORM IN WHICH MANUFACTURER AGREES TO REPAIR OR REPLACE COMPONENTS OF SPLIT-SYSTEM AIR-CONDITIONING UNITS THAT FAIL IN MATERIALS OR WORKMANSHIP WITHIN SPECIFIED WARRANTY PERIOD.

1. WARRANTY PERIOD:

a. FOR COMPRESSOR: FIVE YEARS FROM DATE OF SUBSTANTIAL COMPLETION.

b. FOR PARTS: ONE YEAR FROM DATE OF SUBSTANTIAL COMPLETION.

c. FOR LABOR: ONE YEAR FROM DATE OF SUBSTANTIAL COMPLETION.

PART 2 - PRODUCTS

2.1 ACCEPTABLE MANUFACTURERS

A. DAIKIN, AAON, JCI, TRANE, CARRIER, FRASER JOHNSTON, BRYANT

2.2 INDOOR UNITS

A. EVAPORATOR-FAN COMPONENTS:

1. AIRFLOW: UP-FLOW/HORIZONTAL/MULTI-POSITION

2. CHASSIS: PRE-PAINTED ENAMEL HEAVY GAUGE GALVANIZED STEEL WITH FLANGED EDGES, REMOVABLE PANELS FOR SERVICING, AND INSULATION ON BACK OF PANEL.

3. INSULATION: FACED, GLASS-FIBER DUCT LINER.

4. CONDENSATE DRAIN PANS:

a. FABRICATED WITH TWO PERCENT SLOPE IN AT LEAST TWO PLANES TO COLLECT CONDENSATE FROM COOLING COILS (INCLUDING COIL PIPING CONNECTIONS, COIL HEADERS, AND RETURN BENDS) AND TO DIRECT WATER TOWARD DRAIN CONNECTION.

a) LENGTH: EXTEND DRAIN PAN DOWNSTREAM FROM LEAVING FACE TO COMPLY WITH ASHRAE 62.1.

b. DRAIN CONNECTION: LOCATED AT LOWEST POINT OF PAN AND SIZED TO PREVENT OVERFLOW. TERMINATE WITH THREADED NIPPLE ON ONE END OF PAN.

c. PAN-TOP SURFACE COATING: ASPHALTIC WATERPROOFING COMPOUND.

5. REFRIGERANT COIL: COPPER TUBE, WITH MECHANICALLY BONDED ALUMINUM FINS AND THERMAL-EXPANSION VALVE. COMPLY WITH ARI 206/110.

6. ELECTRIC COIL: HELICAL, NICKEL-CHROME, RESISTANCE-WIRE HEATING ELEMENTS; WITH REFRACTORY CERAMIC SUPPORT BUSHINGS, AUTOMATIC-RESET THERMAL CUTOUT, BUILT-IN MAGNETIC CONTACTORS, MANUAL-RESET THERMAL CUTOUT, AIRFLOW PROVING DEVICE, AND ONE-TIME FUSES IN TERMINAL BOX FOR OVERCURRENT PROTECTION.

7. DIRECT DRIVE FAN: STATICALLY AND DYNAMICALLY BALANCED BEFORE INSTALLATION, RESILIENTLY MOUNTED MOTOR, EASILY REMOVABLE FOR SERVICE, TIME DELAY FAN RELAY.

8. FAN MOTORS: COMPLY WITH NEMA DESIGNATION, TEMPERATURE RATING, SERVICE FACTOR, ENCLOSURE TYPE, AND EFFICIENCY REQUIREMENTS. MULTITAPPED, MULTISPEED WITH INTERNAL THERMAL PROTECTION AND PERMANENT LUBRICATION. PERMANENTLY LUBRICATED, BALL-BEARING MOTORS WITH BUILT-IN THERMAL-OVERLOAD PROTECTION. WIRING TERMINATIONS: CONNECT MOTOR TO CHASSIS WIRING WITH PLUG CONNECTION

2.3 OUTDOOR UNITS

A. AIR-COOLED, COMPRESSOR CONDENSER COMPONENTS: CASING: STEEL, FINISHED WITH BAKED ENAMEL IN COLOR, WITH REMOVABLE PANELS FOR ACCESS TO CONTROLS, WEEP HOLES FOR WATER DRAINAGE, AND MOUNTING HOLES IN BASE. PROVIDE BRASS SERVICE VALVES, FITTINGS, AND GAGE PORTS ON EXTERIOR OF CASING. PROVIDE COIL PROTECTION PANELS. COMPRESSOR: HERMETICALLY SEALED WITH CRANKCASE HEATER AND MOUNTED ON VIBRATION ISOLATION DEVICE. COMPRESSOR MOTOR SHALL HAVE THERMAL- AND CURRENT-SENSITIVE OVERLOAD DEVICES, START CAPACITOR, RELAY, AND CONTACTOR. COMPRESSOR TYPE: SCROLL. TWO-SPEED COMPRESSOR MOTOR WITH MANUAL-RESET HIGH-PRESSURE SWITCH AND AUTOMATIC-RESET LOW-PRESSURE SWITCH. REFRIGERANT: R-410A. REFRIGERANT COIL: COPPER TUBE, WITH MECHANICALLY BONDED ALUMINUM FINS AND LIQUID SUBCOOLER. COMPLY WITH ARI 206/110.

1. FAN: ALUMINUM-PROPELLER TYPE, DIRECTLY CONNECTED TO MOTOR.

2. MOTOR: PERMANENTLY LUBRICATED, WITH INTEGRAL THERMAL-OVERLOAD PROTECTION.

3. HIGH- AND LOW-PRESSURE SWITCHES.

4. HIGH-CAPACITY LIQUID AIR DRIER.

5. LOW AMBIENT KIT: PERMITS OPERATION DOWN TO 45 DEG F.

2.4 ACCESSORIES

A. CONTROL EQUIPMENT AND SEQUENCE OF OPERATION ARE SPECIFIED IN SECTION 230900 "INSTRUMENTATION AND CONTROLS FOR HVAC".

B. THERMOSTAT: TO CONTROL COMPRESSOR AND EVAPORATOR FAN, WITH THE FOLLOWING FEATURES: COMPRESSOR TIME DELAY. 7-DAY/24-HOUR TIME CONTROL OF SYSTEM STOP AND START. LIQUID-CRYSTAL DISPLAY INDICATING TEMPERATURE, SET-POINT TEMPERATURE, TIME SETTING, OPERATING MODE, AND FAN SPEED. FAN-SPEED SELECTION INCLUDING AUTO SETTING.

C. AUTOMATIC-RESET TIMER TO PREVENT RAPID CYCLING OF COMPRESSOR.

D. CONDENSATE OVERFLOW SWITCH

E. REFRIGERANT LINE KITS: ANNEALED-COPPER SUCTION AND LIQUID LINES FACTORY CLEANED, DRIED, PRESSURIZED WITH NITROGEN, SEALED, AND WITH SUCTION LINE INSULATED. PROVIDE IN STANDARD LENGTHS FOR INSTALLATION WITHOUT JOINTS, EXCEPT AT EQUIPMENT CONNECTIONS.

1. THIS PIPING SHALL BE CAPPED THROUGHOUT THE CONSTRUCTION TO PREVENT ANY FOREIGN MATERIALS FROM ENTERING THE PIPING. FITTINGS SHALL BE WROUGHT COPPER SOLDER JOINT TYPE. DRY NITROGEN SHALL BE BLED THROUGH PIPING WHILE JOINTS ARE BEING BRAZED. JOINTS SHALL BE AS FOLLOWS: COPPER TO BRASS - SILVER SOLDER. COPPER TO COPPER - SILFOS.

2. JOINTS: COPPER TUBING CONNECTIONS SHALL BE MADE UP WITH 95/5 TIN ANTIMONY SOLDER OR SILFOS, IN ACCORDANCE WITH THE RECOMMENDATIONS OF THE MANUFACTURER OR AS SPECIFIED HEREINAFTER.

3. REFRIGERANT PIPING INSULATION: ARMSTRONG ARMAFLEX INSULATION 1/2" THICK WITH FITTINGS COVERED WITH MITERED SECTIONS OF INSULATION AND SEALED WITH ARMAFLEX 520 ADHESIVE. ALL INSULATION ON OUTDOOR INSTALLATION SHALL BE ADDITIONALLY PROTECTED WITH TWO (2) COATS OF ARMAFLEX WB PIGMENTED ACRYLIC LATEX FINISH. COMPLY WITH ASTM C 534/C 534M, TYPE I.

F. CONDENSATE DRAIN PIPING: COPPER TUBING: ASTM B88, TYPE L, M OR DWV HARD DRAWN. FITTINGS: ANSI/ASME B16.18 BRONZE SAND CASTINGS, ANSI B16.22 WROUGHT COPPER, ANSI/ASME B16.23 CAST BRASS, OR ANSI/ASME B16.29 SOLDER WROUGHT COPPER. JOINTS: ASTM B32, SOLDER, GRADE 95TA OR GROOVED JOINTS WITH EPDM GASKETS. CONDENSATE DRAIN PIPING INSULATION: FLEXIBLE ELASTOMERIC INSULATION: 1/2” CLOSED-CELL, SPONGE- OR EXPANDED-RUBBER MATERIALS. COMPLY WITH ASTM C534, TYPE I FOR TUBULAR MATERIALS.

PART 3 - EXECUTION

3.1 INSTALLATION

A. INSTALL UNITS' LEVEL AND PLUMB.

B. INSTALL EVAPORATOR-FAN COMPONENTS USING MANUFACTURER'S STANDARD MOUNTING DEVICES SECURELY FASTENED TO BUILDING STRUCTURE.

C. INSTALL ROOF-MOUNTED, COMPRESSOR-CONDENSER COMPONENTS ON EQUIPMENT SUPPORTS AS SPECIFIED. ANCHOR UNITS TO SUPPORTS WITH REMOVABLE, CADMIUM-PLATED FASTENERS.

D. EQUIPMENT MOUNTING:

1. INSTALL GROUND-MOUNTED, COMPRESSOR-CONDENSER COMPONENTS ON CAST-IN-PLACE CONCRETE EQUIPMENT BASE(S).

E. INSTALL AND CONNECT PRE-CHARGED REFRIGERANT TUBING TO COMPONENT'S QUICK-CONNECT FITTINGS. INSTALL TUBING TO ALLOW ACCESS TO UNIT.

Notice

The Architect/Engineer does not define the scope of individual trades, subcontractors, material suppliers, or vendors. Any sheet numbering system used which identifies disciplines is solely for the Architect/Engineer's convenience, and is not intended to define a subcontractor's scope of work. Information regarding individual trades, subcontractors, material suppliers, and vendors may be detailed, described and indicated at different locations throughout these documents. No consideration will be given to requests for change orders for failure to obtain and review the complete set of drawings and specifications when preparing bids, prices, and quotations.

TowerPinkster
ARCHITECTURE • ENGINEERING • INTERIORS

242 East Kalamazoo Avenue, Suite 100
Kalamazoo, Michigan 49007-5828
269.343.6133 PHONE 269.343.6633 FAX

630 Walnut St.
Jeffersonville, IN 47130
812.282.9554 PHONE

TOWERPINKSTER.COM

STATE OF KENTUCKY
MALLORY L. P. ANDERSON
36770
LICENSED PROFESSIONAL ENGINEER

ISSUED FOR

DATE

Revisions

PROJECT TITLE
2025
RENOVATIONS

OWNER
FIRST HARRISON
BANK

130 S. BUCKMAN ST.
SHEPHERDSVILLE, KY 40165

Drawn

Checked By

SHEET TITLE
MECHANICAL
SPECIFICATIONS

DATE

SHEET NUMBER
M-802

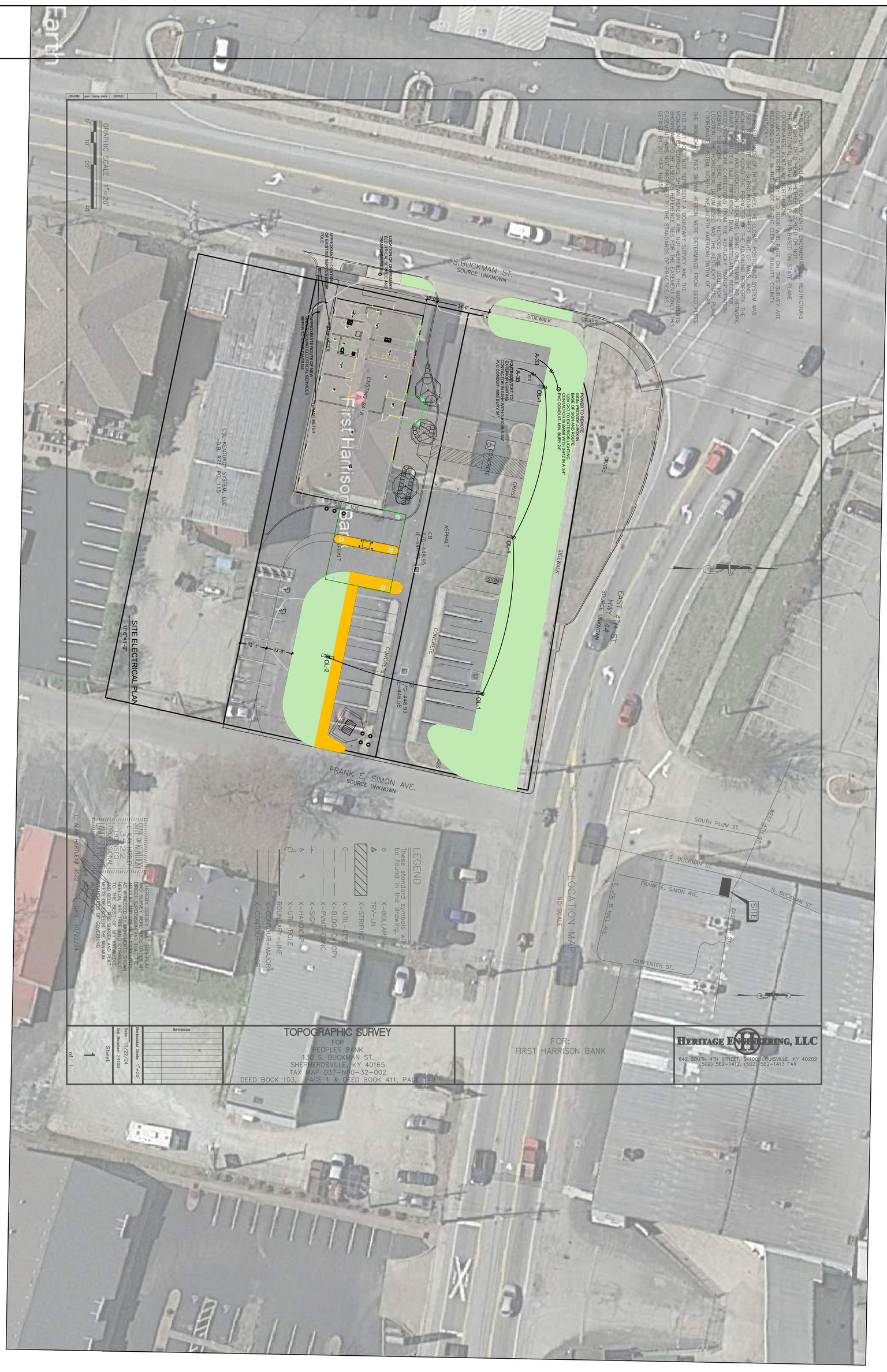

SHEET TITLE
SITE ELECTRICAL PLAN

SHEET NUMBER
ES-100

DATE
APRIL 30, 2025

OWNER
FIRST HARRISON BANK

130 S. BUCKMAN ST.
SHEPHERDSVILLE, KY
40165

PROJECT TITLE
BUCKMAN ST. BRANCH -
2025 RENOVATIONS

ISSUED FOR **DATE**

STATE OF KENTUCKY
ERNEST CRUISE II
17848
LICENSED PROFESSIONAL ENGINEER

TowerPinkster
ARCHITECTURE • ENGINEERING • INTERIORS
TOWERPINKSTER.COM

LIGHT FIXTURE SCHEDULE :

TYPE	DESCRIPTION	MODEL	LUMENS/COLOR TEMP	REMARKS	VOLTAGE
A	RECESSED 2X4 LED VOLUMETRIC LED LAY-IN WITH SOLID CENTER AND LIT EDGE LIGHTS	TGS @ CT-24-VS-DB-C3000K-U VOLLIANS @ EQUAL LIGHTOLIER @ EQUAL	3000 LUMENS 3500 KELVIN	PROVIDE GRID HOLD DOWN CLIPS TO SECURE FIXTURE TO CEILING GRID	120V
B	6' RECESSED LED ARCHITECTURAL CAN WITH SOFT SPECULAR FINISH REFLECTOR	VOLLIANS @ 4FBR-6-C-CD-CS-SDH-UNV/ 4FBR-6-FTS LIGHTOLIER @ EQUAL PRESCOLITE @ EQUAL	2000 LUMENS 3500 KELVIN	SECURE NEW CONSTRUCTION FIXTURE FRAME TO CEILING AS REQUIRED TO LOCATE FIXTURE WHERE INDICATED	120V
C	SEMI SURFACE LED DESK LIGHT	GREEN CREATIVE @ SLMT-3-9-CCTS-SD62BV LITHONIA @ EQUAL LIGHTOLIER @ EQUAL	800 LUMENS 3500 KELVIN	PROVIDE RECESSED J-BOX SECURED TO STRUCTURE ABOVE PROVIDE UNSWITCHED HOT TO FIXTURE	120V
D	4' SURFACE LEDGES LED STRIP LIGHT	ILP @ VS4-SL-V-CCTS-FSL TGS @ EQUAL LIGHTOLIER @ EQUAL	5000 LUMENS 3500 KELVIN	SURFACE MOUNT TO CEILING STRUCTURE	120V
E	THERMO PLASTIC CONSUMATION EXIT EMERGENCY LIGHT	ENERGENSEE @ SECCURV DUALITE @ EQUAL LITHONIA @ EQUAL	INCLUDED	WIRE FIXTURE AHEAD OF AN LOCAL AREA SWITCHING	120V
EH	HEAD SURFACE LED EMERGENCY LIGHT	ENERGENSEE @ SECHPEMV DUALITE @ EQUAL LITHONIA @ EQUAL	LAMPS INCLUDED	WIRE FIXTURE AHEAD OF AN LOCAL AREA SWITCHING	120V
ER	LINE VOLTAGE EXTERIOR WET LOCATION EGRESS LIGHT WITH COLD WEATHER BATTERY	ASTRALITE @ SC-WP-LED-F-WESH-C DUALITE @ EQUAL LITHONIA @ EQUAL	LAMPS INCLUDED	WIRE FIXTURE AHEAD OF ANY LOCAL AREA SWITCHING	120V
F	LOW PROFILE SURFACE CANOPY LIGHT	TGS @ SCP-L60-C4000K-U-3-SA ALPHALITE @ EQUAL HUBBLE @ EQUAL	5000 LUMENS 4000 KELVIN	PROVIDE RECESSED J-BOX IN CEILING AND BLOCKING TO SECURE SURFACE FIXTURE TO CEILING	120V
G	SURFACE LED WRAP FIXTURE	ILP @ SV64-WL-U-35 LITHONIA @ EQUAL LIGHTOLIER @ EQUAL	4800 LUMENS 3500 KELVIN	PROVIDE FAN RATED RECESSED J-BOX IN CEILING TO SUPPORT FIXTURE	120V
H	SUSPENDED 36" DIAMETER DIRECT INDIRECT DECORATIVE RING FIXTURE	BETA CALCO @ RLMPD54-F/WSH-LPF840-LP6030-CR90-CT4DR-UBD-V-S4W-SSE-FA2E-CF90-WPQD-E2-CS1-C2 OR PRE-APPROVED EQUAL	400 LUMENS PER FT. DIRECT 300 LUMENS PER FT. INDIRECT 3500 KELVIN	PROVIDE FAN RATED RECESSED J-BOX IN CEILING TO SUPPORT FIXTURE- INSTALL PER MANUFACTURER'S INSTRUCTIONS -VERIFY FINAL LOCATION OF WAVE CANOPY PRIOR TO INSTALLATION	120V
J	SUSPENDED 48" DIAMETER DIRECT INDIRECT DECORATIVE RING FIXTURE	BETA CALCO @ RLMPD54-F/WSH-LPF840-LP6030-CR90-CT4DR-UBD-V-S4W-SSE-FA2E-CF90-WPQD-E2-CS1-C2 OR PRE-APPROVED EQUAL	400 LUMENS PER FT. DIRECT 300 LUMENS PER FT. INDIRECT 3500 KELVIN	PROVIDE FAN RATED RECESSED J-BOX IN CEILING TO SUPPORT FIXTURE- INSTALL PER MANUFACTURER'S INSTRUCTIONS -VERIFY FINAL LOCATION OF WAVE CANOPY PRIOR TO INSTALLATION	120V
K	24"X48" DIRECT/INDIRECT DECORATIVE CONVEX CERAMIC LED SUSPENDED PENDANT	THE LIGHTING @ SLIV5-L-35K-S-WHCD-3C-F13-SDHL OR PRE-APPROVED EQUAL	4040 LUMENS 3500 KELVIN	PROVIDE FAN RATED RECESSED J-BOX IN CEILING TO SUPPORT POWER CANOPY- INSTALL PER MANUFACTURER'S INSTRUCTIONS -VERIFY FINAL LOCATION OF WAVE CANOPY PRIOR TO INSTALLATION- FINISH TO BE SELECTED BY OWNER	120V
L	4' RECESSED LED ARCHITECTURAL CAN WITH SOFT SPECULAR FINISH REFLECTOR	VOLLIANS @ 4FBR-6-C-CD-CS-SDH-UNV/ 4FBR-6-FTS LIGHTOLIER @ EQUAL PRESCOLITE @ EQUAL	1600 LUMENS 4000 KELVIN		120V
WP	SURFACE FULL CUT OFF LED LOW PROFILE WALL PACK	SPITZER @ WPFP-2CL-U-CC-TS-CS-DB LITHONIA @ EQUAL ILP @ EQUAL	3700 LUMENS 4000 KELVIN	WALL MOUNT UP HIGH AT 6' BELOW TOP OF EXTERIOR WALL- VERIFY FINAL REUSH-IN WITH ARCHITECT PRIOR TO INSTALLATION	120V
WS	CRAFTSMAN STYLE EXTERIOR WALL SCONCE	EVERGREEN @ 1602BL SERIES PROGRESS @ EQUAL TGS @ EQUAL	2000 LUMENS 4000 KELVIN	WALL MOUNT ON EITHER SIDE OF ENTRANCE DOOR AT HEIGHT AS DETERMINED BY ARCHITECT	120V
DL1	SINGLE HEAD LED AREA LIGHT WITH TYPE 3 DISTRIBUTION ON A 20' SQUARE STEEL POLE ON A CONCRETE SIGNATURE BASE	VISIONAIRE @ VFORM-STL-SGL-4C-UNV-4W-/-FINISH-LS/SHTS-4S-7-20'-RBC-343/EI-FINISH ILP @ EQUAL LITHONIA @ EQUAL	26000 LUMENS 4000 KELVIN	PROVIDE 10"DIA STEEL REINFORCED CONCRETE FOUNDATION WITH 24" OF BASE ABOVE FINISHED GRADE- FINISH TO BE SELECTED BY ARCHITECT	120V
DL2	DUAL HEAD LED AREA LIGHT AT 180 DEGREES ON A WITH TYPE 3 DISTRIBUTION ON A 20' SQUARE STEEL POLE ON A CONCRETE SIGNATURE BASE	VISIONAIRE @ VFORM-STL-SGL-4C-UNV-4W-/-FINISH-LS/SHTS-4S-7-20'-RBC-343/EI-FINISH ILP @ EQUAL LITHONIA @ EQUAL	26000 LUMENS 4000 KELVIN	PROVIDE 10"DIA STEEL REINFORCED CONCRETE FOUNDATION WITH 24" OF BASE ABOVE FINISHED GRADE- FINISH TO BE SELECTED BY ARCHITECT	120V

LIGHTING GENERAL NOTES

1. ALL WORK SHALL BE INSTALLED IN ACCORDANCE WITH THE LATEST EDITION OF THE NATIONAL ELECTRICAL CODE.
2. WIRE ALL EMERGENCY LIGHTING FIXTURES AHEAD OF LOCAL AREA SWITCHING.
3. COORDINATE EXACT FIXTURE PLACEMENT WITH OTHER EQUIPMENT IN THE CEILING SPACE.
4. MINIMUM WIRE SIZE SHALL BE #12 COPPER. MAXIMUM 3 CIRCUITS PER HOME RUN EACH SHALL HAVE SEPARATED NEUTRAL.

LIGHTING SYMBOL LEGEND

- S — SINGLE POLE 20 AMP SWITCH AT 44" AFF
- S^3 — THREE WAY 20 AMP SWITCH AT 44" AFF
- S^{OS} — 3-WAY CAPABLE I/R VACANCY SENSOR SWITCH AT 44" AFF
- S^{0-10} — 0-10 VOLT DIMMER SWITCH AT 44" AFF
- $S^{\varnothing}$ — PHASE DIMMER SWITCH AT 44" AFF
- MC CABLE WIRING WITH REQUIRED CONDUCTORS
- NL — UN-SWITCHED NIGHT LIGHT TO BURN 24/7
- 3- #12 IN 3/4" CONDUIT OR MC CABLE UNLESS NOTED OTHERWISE
- CIRCUIT HOMERUN TO ELECTRICAL PANEL WITH 3-#12 IN 3/4 EMT/MC UNLESS OTHERWISE NOTED

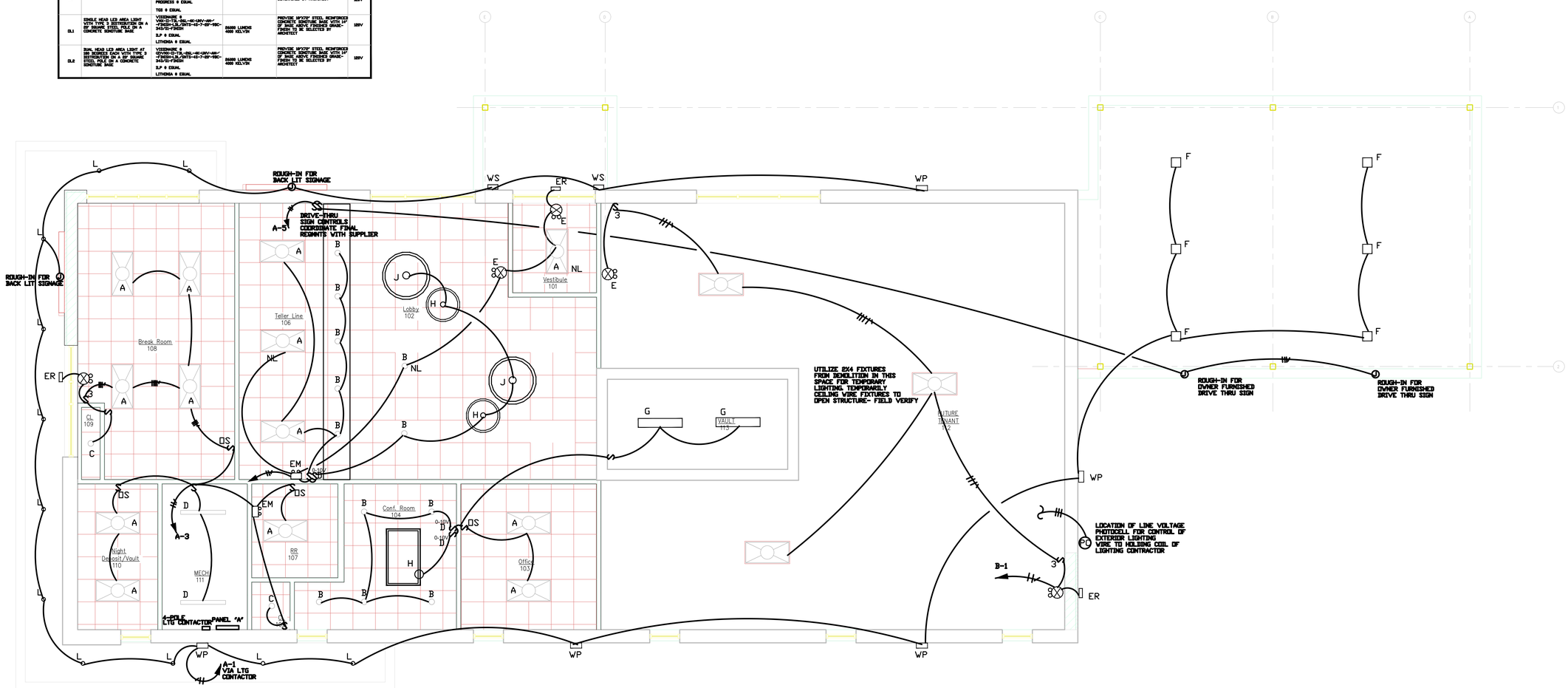

LIGHTING PLAN
1/4"=1'-0"

TowerPinkster
ARCHITECTURE · ENGINEERING · INTERIORS

STATE OF KENTUCKY
ERNEST CRUSE, II
17848
LICENSED PROFESSIONAL ENGINEER

ISSUED FOR	DATE

PROJECT TITLE
BUCKMAN ST. BRANCH - 2025 RENOVATIONS

OWNER
FIRST HARRISON BANK

130 S. BUCKMAN ST.
SHEPHERDSVILLE, KY
40165

SHEET TITLE
LIGHTING PLAN

DATE
APRIL 30, 2025

SHEET NUMBER
E-101

POWER SYMBOL LEGEND

- DUPLEX RECEPTACLE AT 15" A.F.F. UNLESS NOTED OTHERWISE
- DUPLEX RECEPTACLE MOUNTED ABOVE COUNTER HEIGHT
- QUADRAPLEX RECEPTACLE AT 15" A.F.F. UNLESS NOTED OTHERWISE
- DATA OUTLET WITCH 3/4" CONDUIT STUB TO ACCESSIBLE POINT ABOVE CEILING AND (2) CAT 6 PLENUM RATED CABLES FROM OUTLET TO IT RACK WITH 10' OF SLACK AT RACK
- COMBINATION DATA/POWER FLUSH FLOOR BOX -COORDINATE WITH FLOOR TYPE
- AC — ABOVE COUNTER MOUNTING OF DEVICE
- UC — UNDER CABINET RED DEDICATED RECEPTACLE
- GFI — GROUND FAULT TYPE RECEPTACLE
- MW — MICROWAVE RECEPTACLE ABOVE COUNTER
- WP — WEATHERPROOF IN USE COVER FOR RECEPTACLE DEVICE
- TV — J-BOX FOR LOW VOLTAGE WIRING AT 68" AFF FOR TV OUTLET
- J — JUNCTION BOX ROUGH-IN COORDINATE WITH EQUIP. SUPPLIER
- S^M — FRACTIONAL HORSEPOWER MOTOR DISCONNECT SWITCH 120 VOLT
- A — CIRCUIT HOMERUN 3-#12 IN 3/4" MC.
- DISCONNECT SWITCH SIZED PER LOAD SERVED- NEMA 3R WHERE OUTDOORS

GENERAL POWER NOTES

1. ALL WORK SHALL BE INSTALLED IN ACCORDANCE WITH THE LATEST EDITION OF THE NATIONAL ELECTRICAL CODE.
2. MINIMUM WIRE SIZE SHALL BE #12 COPPER. COORDINATE WITH EQUIPMENT ACTUAL WIRE SIZES BASED ON EQUIPMENT NAME PLATE RATINGS.
3. ALL EXPOSED CONDUIT BELOW 10' SHALL BE EMT TYPE. MC CABLE ALLOWED ABOVE CEILINGS AND IN STRUCTURAL AREA OF CEILINGS. SCHEDULE 40 PVC FOR U.G. CONDUIT.
4. COORDINATE WITH MECHANICAL CONTRACTOR FOR REQUIRED CONTROL WIRING ASSOCIATED WITH HVAC EQUIPMENT.
5. PROVIDE PANELBOARD CIRCUIT DIRECTORIES WHICH MATCH FIELD WIRING/CIRCUITING FOR EACH POWER DISTRIBUTION PANEL.
6. COORDINATE FINAL PLACEMENT OF ALL DEVICES WITH CASEWORK AND OWNER. VERIFY FINAL LOCATIONS FOR CASEWORK MOUNTED DEVICE WITH ARCHITECT AND OWNER PRIOR TO ROUGH-IN.

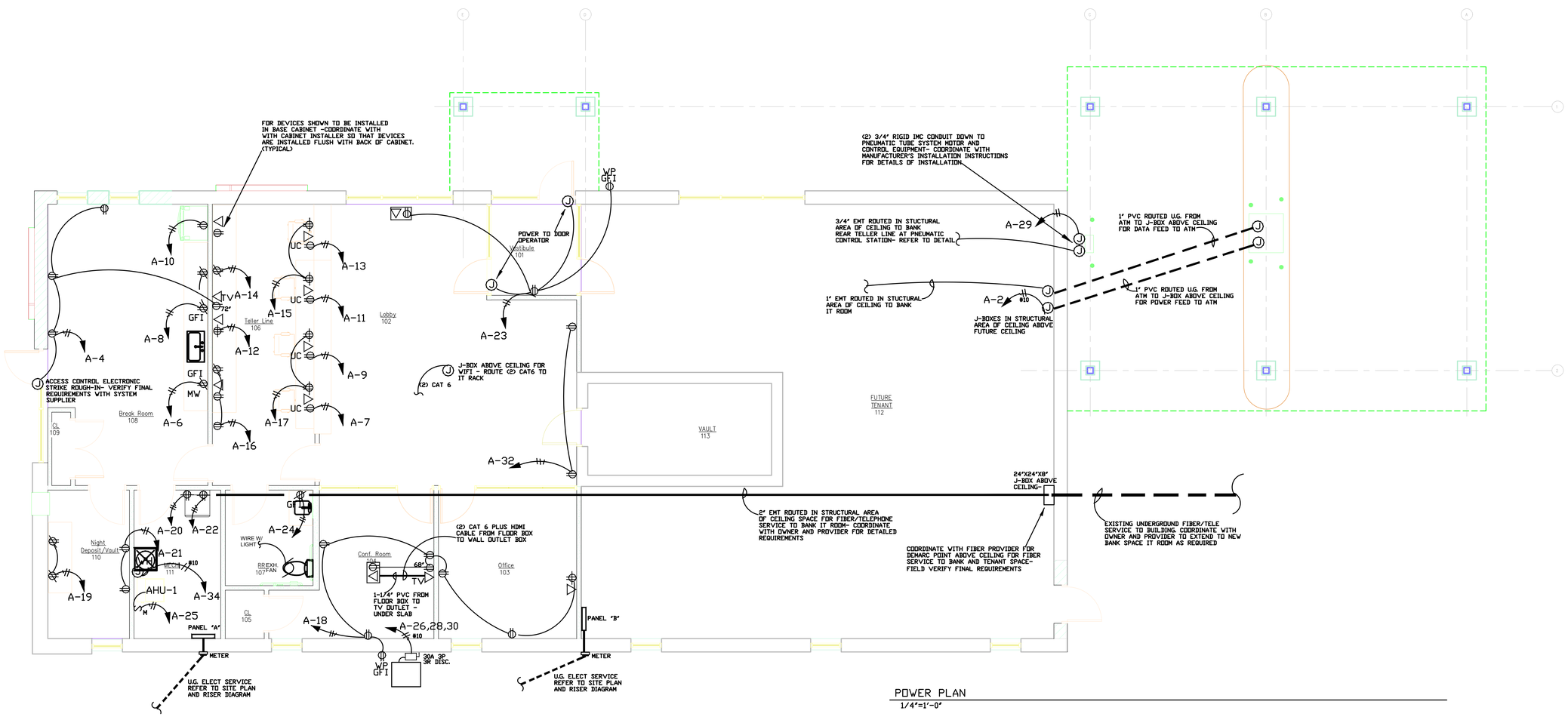

POWER PLAN
1/4"=1'-0"

TowerPinkster
ARCHITECTURE • ENGINEERING • INTERIORS
TOWERPINKSTER.COM

STATE OF KENTUCKY
ERNEST CRUSE, II
17848
LICENSED PROFESSIONAL ENGINEER

ISSUED FOR	DATE

PROJECT TITLE
BUCKMAN ST. BRANCH - 2025 RENOVATIONS

OWNER
FIRST HARRISON BANK

130 S. BUCKMAN ST.
SHEPHERDSVILLE, KY
40165

DATE
APRIL 30, 2025

SHEET TITLE
POWER PLAN

SHEET NUMBER
E-102

"A" 120/208V 3 PH 4W 200 A BUS 200A MAIN BREAKER 22KAIC

LOAD DESCRIPTION	FEEDER	CB/ POLE	CIRC. NO.	CIRC. NO.	CB/ POLE	FEEDER	LOAD DESCRIPTION
BLDG EXT. LIGHTING	#12	20 1P	1	2	30 1P	#10	DRIVE THRU ATM
BLDG INTERIOR LTS	#12	20 1P	3	4	20 1P	#12	BRKRM RECEPTS
DRIVE THRU SIGN	#12	20 1P	5	6	20 1P	#12	BRKRM MICROWAVE RECP
TELLER DED. RED RECP	#12	20 1P	7	8	20 1P	#12	BRKRM COOUNTER RECP
TELLER DED. RED RECP	#12	20 1P	9	10	20 1P	#12	BRKRM FRIG CKT
TELLER DED. RED RECP	#12	20 1P	11	12	20 1P	#12	CASH MACH RECEPT
TELLER DED. RED RECP	#12	20 1P	13	14	20 1P	#12	REAR TELLER LINE RECPS
TELLER CNTR RECPS	#12	20 1P	15	16	20 1P	#12	REAR TELLER LINE RECPS
TELLER CNTR RECPS	#12	20 1P	17	18	20 1P	#12	OFF/CONF RM RECPS
NIGHT DEP RECPS	#12	20 1P	19	20	20 1P	#12	IT RACK RECPT
NIGHT DEP RECPS	#12	20 1P	21	22	20 1P	#12	IT RACK RECPT
LOBBY/VEST RECPS	#12	20 1P	23	24	20 1P	#12	RR/EXT RECPTS
AHU	#12	20 1P	25	26	30 3P	#10	COND UNIT
SITE SIGNAGE	#12	20 1P	27	28	—	#10	—
PNEUMATIC TUBE	#12	20 1P	29	30	—	#10	—
LOBBY/TELLER LTG	#12	20 1P	31	32	20 1P	#12	LOBBY RECEPTS
SITE SIGN CKT	#12	20 1P	33	34	30 1P	#10	WATER HEATER CKT
SITE LIGHTING	#10	20 1P	35	36			
SPARE		20 1P	37	38			
SPARE		20 1P	39	40			
SPARE		20 1P	41	42			

"B" 120/208V 3 PH 4W 200 A BUS 200A MAIN BREAKER 22KAIC

LOAD DESCRIPTION	FEEDER	CB/ POLE	CIRC. NO.	CIRC. NO.	CB/ POLE	FEEDER	LOAD DESCRIPTION
LIGHTING CKT	#12	20 1P	1	2			
			3	4			
			5	6			
			7	8			
			9	10			
			11	12			
			13	14			
			15	16			
			17	18			
			19	20			
			21	22			
			23	24			
			25	26			
			27	28			
			29	30			
			31	32			
			33	34			
			35	36			
			37	38			
			39	40			
			41	42			

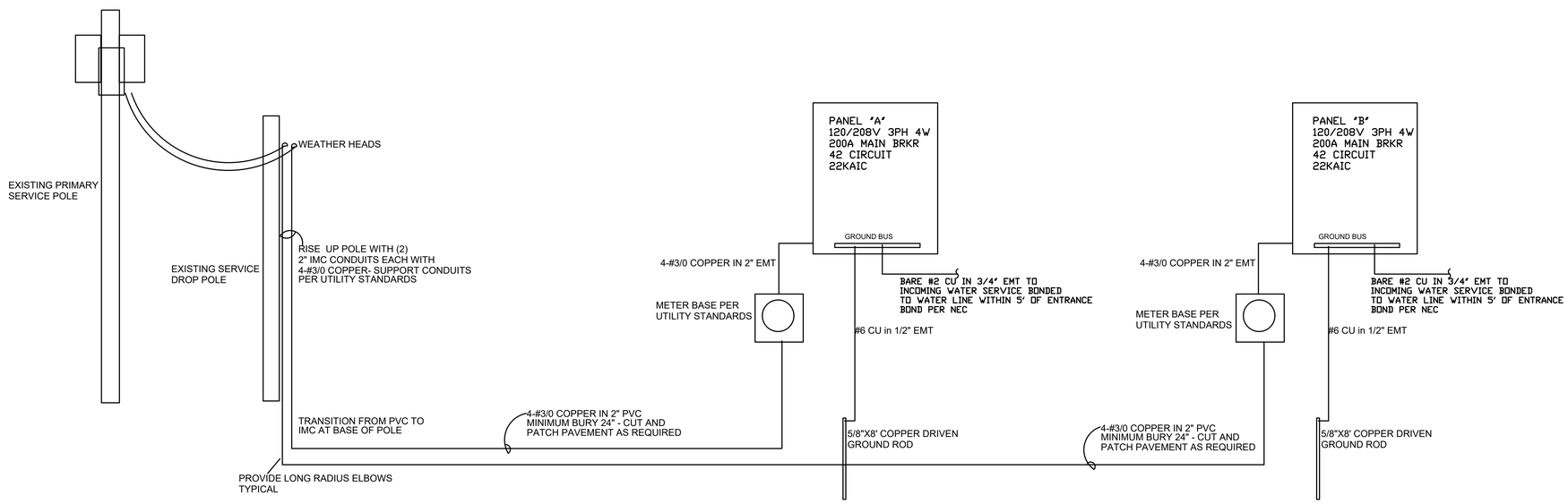

TowerPinkster
ARCHITECTURE • ENGINEERING • INTERIORS
TowerPinkster.com

STATE OF KENTUCKY
ERNEST CRUISE, II
17848
LICENSED PROFESSIONAL ENGINEER

ISSUED FOR DATE

PROJECT TITLE
BUCKMAN ST. BRANCH - 2025 RENOVATIONS

OWNER
FIRST HARRISON BANK

130 S. BUCKMAN ST.
SHEPHERDSVILLE, KY
40165

SHEET TITLE
ELECTRICAL SCHEDULES AND RISER

DATE
APRIL 30, 2025

SHEET NUMBER
E-103